Declassified in Part - Sanitized Copy Approved for Release 2013/10/18 : CIA-RDP80T00246A071100330001-5

STAT

Page Denied

Declassified in Part - Sanitized Copy Approved for Release 2013/10/18 : CIA-RDP80T00246A071100330001-5

Declassified in Part - Sanitized Copy Approved for Release 2013/10/18 : CIA-RDP80T00246A071100330001-5

CENTRAL INTELLIGENCE AGENCY 50X1

This material contains information affecting the National Defense of the United States within the [illegible] ...ionage Laws, T... 18, U.S.C. Secs. 793 and 794, the transmission or revelation of which in any manner to an unauth... ...prohibited by law

S-E-C-R-E-T 50X1
NO FOREIGN DISSEM

COUNTRY	USSR	REPORT	
SUBJECT	Soviet Publication Entitled Technical Description and Instructions for the Use of the Type RAS-UKV Radio Commu[illegible]ication Unit	DATE DISTR.	January 1964
		NO. PAGES	1
		REFERENCES	
DATE OF INFO.			50X1-HUM
PLACE & DATE ACQ.			

THIS IS UNEVALUATED INFORMATION. SOURCE GRADINGS ARE DEFINITIVE. APPRAISAL OF CONTENT IS TENTATIVE.

[redacted] 50X1-HUM

494-page, English-language, Soviet publication entitled Technical Description and Instructions for the Use of the Type RAS-UKV Radio Communication Unit [redacted] 50X1-HUM

The manual is divided into two parts for ease in handling. Part I, the technical description, is made up of pages 3 - 345; Part II, the operating instructions, includes pages 246 - 494. Page 254 and figures 4-1, 4-2, 4-8, 4-9, 4-10, 4-11, 4-12, 6-10, and 6-12 are missing from the text. Several figures are numbered incorrectly. The manual, published in Prague in 1956, is classified Secret by the Soviets. 50X1-HUM

[redacted]

Distribution of Attachment for Retention:

[redacted] 50X1-HUM

OSI:	1 copy
ORR:	1 copy
OEL:	1 copy
Army:	2 copies
Army/FSTC:	1 copy
Air:	1 copy
Air/FTD:	1 copy
SAC:	1 copy
NSA:	1 copy

[redacted] 50X1-HUM

5 4 3 2 1

GROUP 1
Excluded from automatic downgrading and declassification

S-E-C-R-E-T
NO FOREIGN DISSEM

STATE	DIA	ARMY	NAVY	AIR	NSA	AND NIC	OCR	SAC
		Army/FSTC		Air/FTD				

(Note: Field distribution indicated by "#".)

50X1-HUM

Declassified in Part - Sanitized Copy Approved for Release 2013/10/18 : CIA-RDP80T00246A071100330001-5

Declassified in Part - Sanitized Copy Approved for Release 2013/10/18 : CIA-RDP80T00246A071100330001-5

50X1-HUM

TECHNICAL DESCRIPTION AND INSTRUCTIONS FOR THE USE OF THE TYPE

R A S - U K V

RADIO COMMUNICATION UNIT

Part I

Pages 3–245

(English Language)

GROUP 1
Excluded from automatic downgrading and declassification

Declassified in Part - Sanitized Copy Approved for Release 2013/10/18 : CIA-RDP80T00246A071100330001-5

Declassified in Part - Sanitized Copy Approved for Release 2013/10/18 : CIA-RDP80T00246A071100330001-5

50X1-HUM

PART ONE.

TECHNICAL DESCRIPTION OF THE RADIO COMMUNICATION UNIT.

Chapter 1.

General Description of the Radio Communication unit.

1-1. Characteristics.

The radio communication unit PAC-YKR is an ultra short-wave transmitter and receiver suitable for simplex of semi-duplex communication. A three-phase alternating current power source supplies the current for the apparatus.

1-2. The radio communication unit complement.

The radio communication unit consists of a radio van and a mobile power plant. The radio station is mounted in a special body built on a 3 6-161 automobile chasis. The power plant is mpunted on a special three ton type 1-AN-3 trailer (see fig.1-1).

1-3. Principal elements of the radio communication unit.

The radio communication unit consists of the following basic units:

1.) A type YKB-230 transmitter with a central control unit.
3.) A set of crystals for both the receiver and the transmitter.
2.) Two type PC Y-M. receivers.
4.) Metering equipment - block " " - for tuning the receiver.
5). A common panel for both receivers (distribution panel).

Declassified in Part - Sanitized Copy Approved for Release 2013/10/18 : CIA-RDP80T00246A071100330001-5

Declassified in Part - Sanitized Copy Approved for Release 2013/10/18 : CIA-RDP80T00246A071100330001-5

50X1-HUM

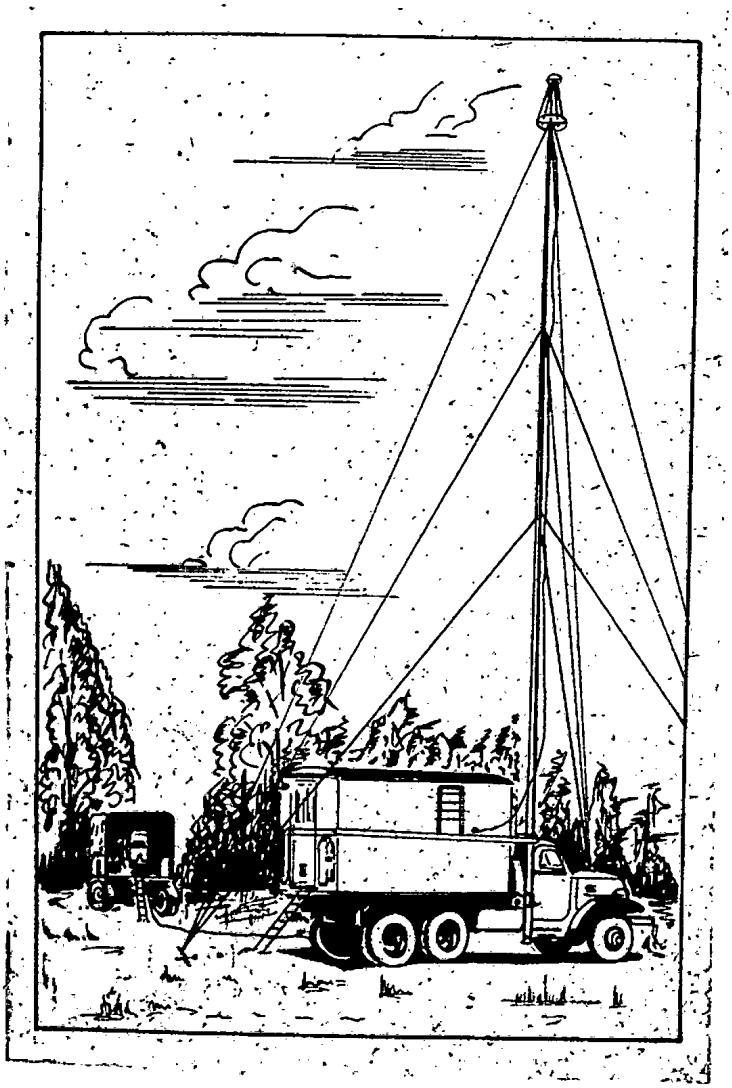

Fig. 1 - 1. General view of the type PAC - Y K B mobile radio communication unit.

Declassified in Part - Sanitized Copy Approved for Release 2013/10/18 : CIA-RDP80T00246A071100330001-5

Declassified in Part - Sanitized Copy Approved for Release 2013/10/18 : CIA-RDP80T00246A071100330001-5

NO FOREIGN DISSEM

50X1-HUM

6. A panel for uncontrolling the radio communication unit from the auxilliary receiver.
7. A dynamic loudspeaker amplifier in the radio van.
8. Type MPY-56 carbon microphones, type A-5 throat microphones, type TA-4 headphones.
9. Two cone and disc type all-directional antennae.
10. A "wave channel" type directional antenna.
11. An antenna for the auxilliary receiver.
12. A telescopic tower
13. Feeders, cables, and a set of guy cables.
14. A type ...C-15/6 engine driven electric generator consisting of a type AB-MK gasoline (petrol) engine driving a type MCA-72/4A 3-phase, 220 V, 15 KVA, 50 cps. generator with both engine and generator mounted on a common foundation.
15. A type BCP-6 rectifier for supplying the transmitter.
16. Two type BC..-2 rectifier for suppliying the receivers and the portable equipment.
17. Twelve type 4HKH-45 M batteries.
18. A type BC..-1 rectifier for charging the batteries.
19. A distribution cabinet for the supply circuit.
20. Two type PY-45A converters with filters.
21. A remote control panel (B Y).
22. Four type TA-43 telephone sets.
23. A connecting line panel.
24. A type 03-1,5 electric heater for heating the radio van.
25. Technical data, auxilliaries and spare parts (measuring instruments, an audio frequency generator, tools, etc.).

1 - 4. Dimension and weights of the radio communication unit elements.

SECRET
NO FOREIGN DISSEM

Declassified in Part - Sanitized Copy Approved for Release 2013/10/18 : CIA-RDP80T00246A071100330001-5

Declassified in Part - Sanitized Copy Approved for Release 2013/10/18 : CIA-RDP80T00246A071100330001-5

Table 1-1 gives the dimensions and weights of the radio communication unit elements.

Table 1-1.

Dimensions and weights of the radio communication unit.

Name of the radio communication part.	Main dimensions in millimeters. Height	Length	Width	Weight in kg.	Remarks.
Radio van with the apparatus.	3200	7000	2320	8400	The height is given with the antenna tower lowered.
Trailer with the power plant.	2600	3700	1760	2400 max.	The weight of the trailer is given without the fuel supply.

1-6. Basic radio communication unit engineering data.

The frequency range of the transmitter and receivers is from 100 to 150 Mc. (from 2 to 3 meters wave length). Both the transmitter and the superheterodyne receivers use crystal frequency stabilization, which ensures disturbance free and dependable communication. The radio communication unit cannot work without the crystals.

The output ~~diff~~ delivered to the antenna feeder and determined at its input end is at least 250 W, regardless of the frequency. It is possible to reduce the output from the maximum value to lc to 40%.

The radio set has two type PC Y- M radio receivers. One of these receivers together with the transmitter is used for the main communication while the other independent receiver is used for auxilliary (complementary) communication. Reception of the main communication unit may be received over the main headphones, dynamic loudspeaker or a special apparatus, while the reception of the auxilliary communication unit can be received only by headphones.

Declassified in Part - Sanitized Copy Approved for Release 2013/10/18 : CIA-RDP80T00246A071100330001-5

Declassified in Part - Sanitized Copy Approved for Release 2013/10/18 : CIA-RDP80T00246A071100330001-5
NO FOREIGN DISSEM

50X1-HUM

Note:

In the following text the main communication unit will be called the main receiver and the auxilliary communication unit will be called the auxilliary receiver.

The sensitivity of the receivers is of the order of 12 volts. The bandwidth with two fold attenuation is not less than 70 Kc, and with a 100 fold attenuation the band width is not wider than 300 Kc.

The radio set has three types of different antennae:

1. An all-directional antenna for communication with airplanes with a circular pattern.
2. Directional antenna (of the "wave channel" type) for communication with land based units.
3. Antenna for auxilliary communication.

The directional or universal (all-directional) antennae are mounted on the telescopic tower which can be raised to a height of 16.5 meters.

The radio communication unit can operate on:

1). telephony when used for airplane communication.
2). telephony when used for land based communication.

Modes of the radio communication unit communication:

1). Simplex communication.
2). Mechanical semi-duplex communication - when using the transmitter and the main receiver with one antenna on the following principle: when broadcasting the microphone push-button is depressed and when receiving the push-button is released.
3). Duplex communication - when using the transmitter and the receiver simultaneously on different wave lengths and when each one works its own directional or universal antenna maintaining the rule that the receiver is located from the transmitter at a distance dependent on the wave length.

SECRET
NO FOREIGN DISSEM
Declassified in Part - Sanitized Copy Approved for Release 2013/10/18 : CIA-RDP80T00246A071100330001-5

Declassified in Part - Sanitized Copy Approved for Release 2013/10/18 : CIA-RDP80T00246A071100330001-5

50X1-HUM

The type PAC-MKB radio set when used for communication with airplanes equipped with type PC Y- 3M radio sets insures dependable communication at an average distance given in table 1-2.

Note:

Depending on conditions of ⅋ wave propagation, the communication distance may increase by 20 - 40 kilometers with airplane communication.

Table 1 - 2.

Average distance of dependable airplane communication with an antenna height of 16.5 meters.

Height of airplane flight in meters.	Distance of the radio communication in kms.
500	90
1000	120
2000	160
3000	200
6000	230
7000	310
10000	350

The distance of dependable communication of like land based radio communication units in an average hilly country-side and an antenna height of 16.5 meters is 60 to 70 kilometers.

The radio communication unit can work on any predetermined fixed frequency of the transmitter and receiver. Therefore the radio communication unit operates on four successively selected communication channels. The preliminary tuning of these channels is performed manually, whereas the following tuning is performed automatically by means of electromechanical devices.

The communication unit must be supplied only by a 50 cps. three-phase alternating current power line or from a special

Declassified in Part - Sanitized Copy Approved for Release 2013/10/18 : CIA-RDP80T00246A071100330001-5

Declassified in Part - Sanitized Copy Approved for Release 2013/10/18 : CIA-RDP80T00246A071100330001-5
NO FOREIGN DISSEM

50X1-HUM

mobile trailer-mounted power plant which forms a part of the radio communication unit. The line voltage may be either 220 V, or 2360 V; the generator voltage of the power plant is 220V. The alternating current is rectified by selenium rectifiers.

The communication unit has battery sets consisting of type 4-NKN-45M batteries.

When the communication unit is without alternating current, these batteries supply current for the receivers, for the remote control unit B Y, for the illuminating lights of the radio van and for the signal lights on the antenna tower.

The maximum power drawn by the radio communication unit from the supply source does not exceed 8 KVA.

The control of the radio communication unit (of the transmitter of the main communication receiver and of the supply power) may be performed by two means:

1). Directly from the respective control units and panels, and panels in the radio van.

2). Remotely (by means of cables) from the remote control unit B Y.

The remote control unit (B Y) is connected with the radio van by means of four conductors and may be located as far as ten kilometers from the radio van.

Two type TA -43 field telephone sets are used for service communication between the radio van and the power plant, and similar field telephones are used in the power plant and at the remote control unit B Y.

Switching the radio communication unit on or off and the transition from one wave length to another one is accomplished by means of depressing the appropriate push button on the control desk.

SECRET
NO FOREIGN DISSEM
Declassified in Part - Sanitized Copy Approved for Release 2013/10/18 : CIA-RDP80T00246A071100330001-5

Declassified in Part - Sanitized Copy Approved for Release 2013/10/18 : CIA-RDP80T00246A071100330001-5
NO FOREIGN DISSEM

50X1-HUM

The radio communication unit is ready for transmission and reception within two minutes after pressing the switching on push button.

The time required for transition from one wave length to another is less than ten seconds if the communication channel of the receiver and transmitter have been adjusted and fixed in advance.

The frequency of using the transmitter and receivers depends on specific conditions of the radio communication.

The radio communication unit can operate 24 hours without break.

The space required for the radio communication unit is 20 x 30 meters with the power plant located 50 meters apart.

Seven persons are required for servicing of the radio communication unit.

1-6. Block diagram of the radio communication unit.

The block diagram of the radio communication unit is given by fig.1-2. The remote control unit (B Y) is indicated in the diagram as removed from the radio van, but is connected to it by cables. The power for the radio van is supplied from the mobile power plant, whereas the remote control unit is powered by batteries.

Dotted lines around certain units indicate that these are packaged.

1-7. Numbering code of components in the basic diagrams.

For simple orientation in the schematic diagrams of the radio communication unit and for their explanation, the numbering code was selected in the following way:

SECRET
NO FOREIGN DISSEM
Declassified in Part - Sanitized Copy Approved for Release 2013/10/18 : CIA-RDP80T00246A071100330001-5

Declassified in Part - Sanitized Copy Approved for Release 2013/10/18 : CIA-RDP80T00246A071100330001-5
NO FOREIGN DISSEM

50X1-HUM

Each part number consists of a letter and 3, to 5 digit number. The letter in front of the number indicates the type of the part (vacuum tubes, relays, connectors, condensers, etc.). The first digit of the number indicates the unit which contains the component. The following 2 digits (the first one of these may be zero) is a sequence number of the components if there are more than one of the same components. One or two of the last digits give a sequence number of components of similar electric characteristics.

The meaning of the letters and the first digits of the number used for the component identification in the diagrams are listed in tables 1-3 and 1-4.

Table 1-3.

The meaning of letters used for part numbers in the schematic diagram.

Letter	Name of detail or part.	Letter	Name of detail or part.
C	Condenser.	M	Measuring instrument (meter).
L	Coil (loop), inductor, choke.	K	Cable, feeder.
R	Resistor.		Vacuum tube, voltage regulator, neon bulb, incadescent bulb, vacuum selector switch.
A	Antenna, symmetrization equipment.		
	Storage battery, rectifier.	M	Electric motor.
B	Fuse, spark gap.		Selector switch, switch, push button, interlock switch, toggle switch.
	Plugs, receptable (terminal board type) connectors, jacks, binding posts.	T	Transformer.
			Loudspeaker.
	Electric generator, vibrator converter, converter.	X	Crystal.
	Terminal board.	-)	Relay, contactor, automatic voltage regulator, automobile horn.

SECRET
NO FOREIGN DISSEM
Declassified in Part - Sanitized Copy Approved for Release 2013/10/18 : CIA-RDP80T00246A071100330001-5

Declassified in Part - Sanitized Copy Approved for Release 2013/10/18 : CIA-RDP80T00246A071100330001-5
NO FOREIGN DISSEM

50X1-HUM

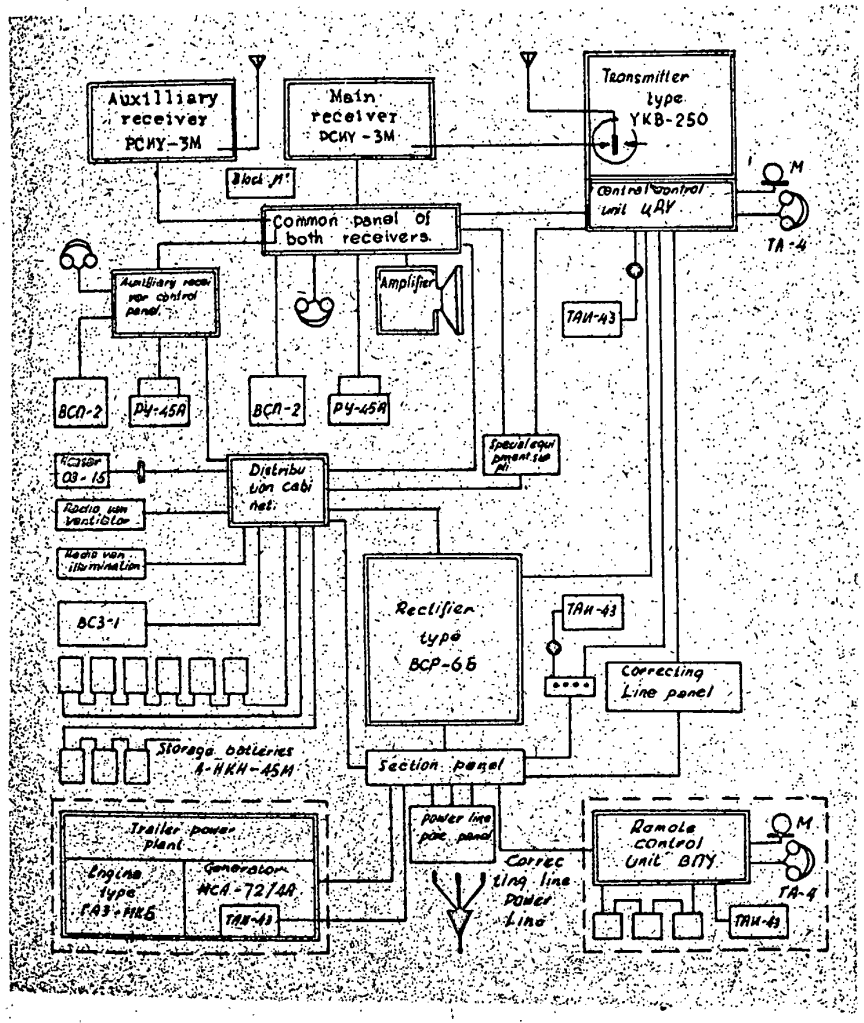

Fig. 1-2. Block diagram of the mobile radio communication unit.

SECRET
NO FOREIGN DISSEM
Declassified in Part - Sanitized Copy Approved for Release 2013/10/18 : CIA-RDP80T00246A071100330001-5

Declassified in Part - Sanitized Copy Approved for Release 2013/10/18 : CIA-RDP80T00246A071100330001-5
NO FOREIGN DISSEM

50X1-HUM

Table 1-4.

The meaning of the first digits of the component, numbers in the schematic diagram.

Number.	Name of the radio communication unit component.
1.	Type YKB-250 transmitter.
2.	Type PC Y-3M. receiver.
3.	Type BCP-6S rectifier. Type BCP-1 rectifier charger, distribution cabinet, supply elements of the transmitter rack, trailer.
4.	Central control unit (including the compensating network).
5.	Portable reception apparatus.
6.	Remote control unit, measuring instrument.
7.	Common panel of both receivers, auxilliary receiver control panel, dynamic loudspeaker amplifier, type BCP-2 rectifier, type PY-45A converter with filter.
8.	Type 3 -10- audio-frequency oscillator, connecting line panel.
9.	Transmitter rack.

Examples:

1. C302 - condenser in the feeder circuit.
2. Ø601 - dynamic loudspeaker in the remote control unit.
3. -)402-1 - electromagnetic relay in the central control unit.

Note:

The component and detail numbers used in the circuit diagram of the type PC Y-3M receiver and in the measuring instrument do not fully agree with the above listed table, since these instruments are manufactured by another factory.

SECRET
NO FOREIGN DISSEM
Declassified in Part - Sanitized Copy Approved for Release 2013/10/18 : CIA-RDP80T00246A071100330001-5

Declassified in Part - Sanitized Copy Approved for Release 2013/10/18 : CIA-RDP80T00246A071100330001-5
NO FOREIGN DISSEM

CHAPTER TWO.

50X1-HUM

The transmitter.

2-1. The block diagram of the transmitter and its special features.

The ultra shortwave radio telephony type YKB-250 transmitter is a complex transmitter with an 18 fold frequency multiplier. This high frequency section consists of six stages with ten vacuum tubes. The audio frequency section consists of three stages and of an automatic volume control of this voltage. Six vacuum tubes are used in this section (Fig. 2-1).

The frequency range of the transmitter is from 100 to 150 Mc, (2 to 3 meters). The tuning dial is marked for the range from 100 to 150 Mc. in 10 Mc. steps.

A crystal stabilizes the driving oscillator. The transmitter cannot operate without the crystals. The frequency range of the transmitter crystals is from 5555.56 to 8333.33 Kc.

The minimum transmitter power delivered to the feeder is 250 W. for the carrier frequency as measured at the feeder input at any frequency range. The output may be reduced to 10 to 40% of the nominal output.

The transmitter is anode amplitude modulated. The modulation co-efficient is automatically maintained at a level of not less than 80% during a change of the modulating input voltage from 0,23 to 1 volt.

The transmitter can operate on any of the four pretuned and fixed frequencies (channels). The circuit elements - the variable condenser - are coupled to the automatic electromechanical tuning device. The preliminary tuning and fixing is performed manually, while the same operations are subsequently performed automatically.

SECRET
NO FOREIGN DISSEM
Declassified in Part - Sanitized Copy Approved for Release 2013/10/18 : CIA-RDP80T00246A071100330001-5

Declassified in Part - Sanitized Copy Approved for Release 2013/10/18 : CIA-RDP80T00246A071100330001-5
NO FOREIGN DISSEM

50X1-HUM

by means of the above mentioned equipment. The selection of any of these channels is made by pressing the respective push button on the control panel (_____).

The first stage of the high frequency section is a crystal oscillator with a frequency doubler in the anode circuit. This doubled crystal frequency voltage is led to the vacuum tube control grid of the succeeding stage - the first tripler. A sixth harmonic of the crystal frequency is generated in the anode circuit of the first frequency tripler and this voltage is applied to the vacuum tube of the third stage - the second frequency tripler.

The eighteenth harmonic of the crystal is generated in the anode circuit of the second frequency tripler, or, in(the)other words, a frequency is obtained which is already in the frequency range from 100 to 150 Mc.

The next three stages (the firstm the second and output power amplifiers) amplify the high frequency signal.

The sixth (output) stage of the transmitter is connected to the antenne system by means of a special symmetrization equipment.

The input circuits of the audio frequency stage are coupled to the modulating transformer of the first stage.

The first and second stages are pre-amplifiers of the audio frequency voltage and the third stage is the modulator from which the audio frequency is transmitted to the output power amplifier (the fifth and the sixth stages) where it modulates the high frequency carrier wave).

The value of the modulating output voltage is checked by a vacuum tube volt meter. The value of the modulation co-efficient is measured by means of a modulation meter. The vacuum tube voltmeter as well as the.....

SECRET
NO FOREIGN DISSEM
Declassified in Part - Sanitized Copy Approved for Release 2013/10/18 : CIA-RDP80T00246A071100330001-5

Declassified in Part - Sanitized Copy Approved for Release 2013/10/18 : CIA-RDP80T00246A071100330001-5

modulation meter are inseparable parts of the transmitter.

The modulation meter is coupled with an operation indicator of the transmitter which serves first of all as a control of the transmission proper by means of headphones and second of all for signaling the operation of the transmitter to the remote control unit.

The following direct current voltages are required for the operation of the transmitter:

1) ± 26 V. - for supplying the microphone circuit, the electric motor in the automatic communication channel selector together with relays for the control circuits.

2) -300 V - for the bias supply of the vacuum tube control grids.

3) + 300 V - for supplying the anodes and the screen grids of the vacuum tubes of the first and second tripler and for the screen grid of the first power amplifier as well as for the screen grids and anodes of the audio frequency pre-amplifier.

4) + 600 V - for supplying the anodes of the vacuum tubes of the first power stage and the screen grids of the modulator.

5) + 1350 V - for supplying the anodes of the vacuum tubes of the second and third power output stages as well as the modulator.

A 300 V stabilized power supply is used for supplying the anode and screen grid of the crystal oscillator-doubler vacuum tube, the anode of the bridge connected amplifier vacuum tube, the direct current supply for the vacuum tube voltmeter. The stabilization is obtained by gasseaous voltage regulators which are supplied with + 600 V from the rectifier.

The transmitter vacuum tube fillement supply is 6,3 V and 12,6 V alternating.....

Declassified in Part - Sanitized Copy Approved for Release 2013/10/18 : CIA-RDP80T00246A071100330001-5

Declassified in Part - Sanitized Copy Approved for Release 2013/10/18 : CIA-RDP80T00246A071100330001-5
NO FOREIGN DISSEM

50X1-HUM

current (from step-down stabilized transformers for 12,6 V and 6,3 V and one separate 6,3 V step-down transformer).

2-2. Schematic diagram of the transmitter.

1. High frequency section.

Crystal oscillator-doubler. The first stage is a driving oscillator with a frequency doubler in the anode circuit. The oscillator is crystal controlled and utilizes a 6 6C (101) beam tetrode vacuum tube. The schematic diagram is given by fig. 2-2.

The crystals X 101, X 102, X 103 and X 104 corresponding to frequency channels 1, 2, 3, and 4 stabilizes the frequency in the range 5555,56 to 8333,33 Kc.

The anode circuit (C 104, C120 and L 106) of the driving oscillat is tuned to the second harmonic of the crystal frequency is concerned, one can disregard the anode resistance. Then one may redraw the diagram of fig. 2-2 in the form given by fig. 2-3.

The diagram fig. 2-3 may be transformed to the crystal oscillator diagram fig. 2-4 with the crystal connected between the control grid and the anode (fig.2-4).

In the diagram fig.2-4 the condenser C.103 is connected between the control grid and the cathode because the screen grid is at the cathode potential as far as the high frequencies are concerned. The importance of this condenser together with the inter-electrode capacity between the control grid and the cathode (C_{ck}), is in creating the necessary feedback for self-oscillation and maintenance of oscillation of the oscillator.

The circuit formed by the inductance coil L 101-1 and the condenser C.101 serve the same purpose, i.e. the formation of conditions necessary for self-oscillation. As far as the first harmonic frequency is concerned, the reactance or this circuit

SECRET
NO FOREIGN DISSEM
Declassified in Part - Sanitized Copy Approved for Release 2013/10/18 : CIA-RDP80T00246A071100330001-5

Declassified in Part - Sanitized Copy Approved for Release 2013/10/18 : CIA-RDP80T00246A071100330001-5
NO FOREIGN DISSEM

50X1-HUM

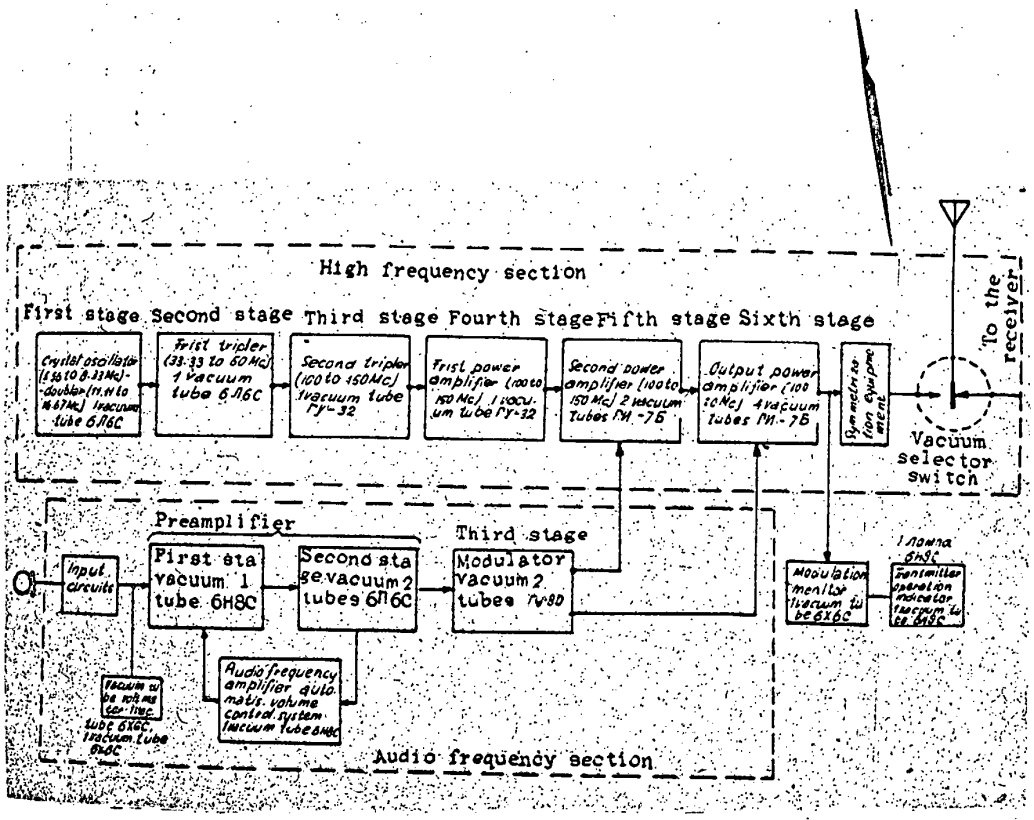
High frequency section
First stage
Second stage
Third stage
Fourth stage
Fifth stage
Sixth stage
Crystal oscillator (33.33 to 8.33 Mc) - doubler (11.11 to 16.67 Mc) 1 vacuum tube 6Л6С
First tripler (33.33 to 50 Mc) 1 vacuum tube 6Л6С
Second tripler (100 to 150 Mc) 1 vacuum tube РУ-32
First power amplifier (100 to 150 Mc) 1 vacuum tube РУ-32
Second power amplifier (100 to 150 Mc) 2 vacuum tubes ГИ-7Б
Output power amplifier (100 to 150 Mc) 4 vacuum tubes ГИ-7Б
Symmetrization system
To the receiver
Vacuum selector switch
Preamplifier
Input circuits
First stage vacuum 1 tube 6Н8С
Second stage vacuum 2 tubes 6Л6С
Third stage
Modulator vacuum 2 tubes ГУ-80
Modulation monitor (vacuum tube 6Х6С)
1 lamp 6Н8С
Transmitter operation indicator (vacuum tube 6Н8С)
Audio frequency amplifier automatic volume control system (vacuum tube 6Н8С)
Audio frequency section

Fig. 2-1. Block diagram of the type YKB-250 transmitter.

SECRET
NO FOREIGN DISSEM
Declassified in Part - Sanitized Copy Approved for Release 2013/10/18 : CIA-RDP80T00246A071100330001-5

Declassified in Part - Sanitized Copy Approved for Release 2013/10/18 : CIA-RDP80T00246A071100330001-5
NO FOREIGN DISSEM

50X1-HUM

has a capacitive character for the first harmonic frequency.

The principle of connecting the crystal between the control grid and the anode is based on the following. The frequency stability of the oscillator is, to a great extent, dependent on the division of the inter-electrode and the distributed wiring capacities connected in parallel to the vacuum tube. Since the input impedance of the beam tetrode (the control grid-to-cathode capacity) is considerably greater than the inter-electrode capacity (control grid-to-anode capacity), therefore also the crystal is connected between the control grid and anode, in order to increase the stability of the driving oscillator.

Since the driving oscillator simultaneously performs also the function of a frequency doubler, therefore its anode circuit consists of a variable condenser C.104, a stabilizing condenser C.120 and an inductance coil L.103. This circuit is tuned to the vcondenser C.104 (C max.= 85 ppF,C.min.= 12.5 ppF) and the inductance of the coil L.105 (L = 2.0 0..Hy) assure the ability to tune th anode circuit to frequencies in the range from 11,111 to 16,667 Mc.

The stabilized anode and screen grid supply voltage of the 6 60 vacuum tube comes from contact 50 of the terminal board 105 over the contacts 7 of the terminal boards 103-1 and 102-1 past the dropping resistors R.145, R.145-1 and R.103 (see the schematic diagram of the transmitter in the appendix).

The control grid bias is obtained automatically from the self-bias resistors R.161 and R.102 and is filtered by the high frequency choke L.101.

The fillement voltage (6,3 V). for the vacuum tube of the first stage (as well as for the vacuum tubes of the second, third, and fourth stages), comes from contacts 137 and 138 of the terminal board 104).

SECRET
NO FOREIGN DISSEM
Declassified in Part - Sanitized Copy Approved for Release 2013/10/18 : CIA-RDP80T00246A071100330001-5

Declassified in Part - Sanitized Copy Approved for Release 2013/10/18 : CIA-RDP80T00246A071100330001-5
NO FOREIGN DISSEM

50X1-HUM

The condenser C.102-2 serves as a blocking condenser of the crystal oscillator anode circuit. The condenser C.102 blocks the screen grid, the condenser C.102-1 blocks the cathode circuit of vacuum tube 101.

The anode circuit of the driving crystal oscillator-doubler is tuned to the maximum anode current of the following stage, the frequency tripler, by means of the milliampermeter 101. The meter ..101 is blocked by the condenser C.102-27 by menas of the selector switch ..101 (in position "1") which connects it in parallel with the shunting resistor R.104 connected in the anode circuit of the vacuum tube ..102 of the first tripler.

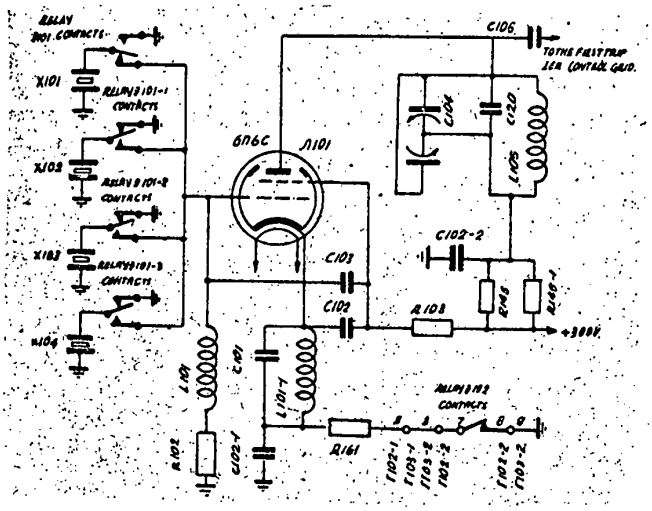

Fig. 2-2. Schematic diagram of the crystal oscillator-doubler.

The first and second stage are capacity coupled by means of the coupling condenser C.105.

The first frequency tripler. The second stage : fig.2-5) consists of the type 6..6C beam tetrode (..102) which works as a frequency tripler.

SECRET
NO FOREIGN DISSEM
Declassified in Part - Sanitized Copy Approved for Release 2013/10/18 : CIA-RDP80T00246A071100330001-5

Declassified in Part - Sanitized Copy Approved for Release 2013/10/18 : CIA-RDP80T00246A071100330001-5
NO FOREIGN DISSEM

50X1-HUM

For removal of asymmetry in the second push=pull stage caused by the output capacitance of the 6..6C tube, an equilizing condenser C.121 is connected to one end of the anode circuit. The capacity of this condenser is equal to the vacuum tube and wiring capacities and insures the symmetry of the circuit.

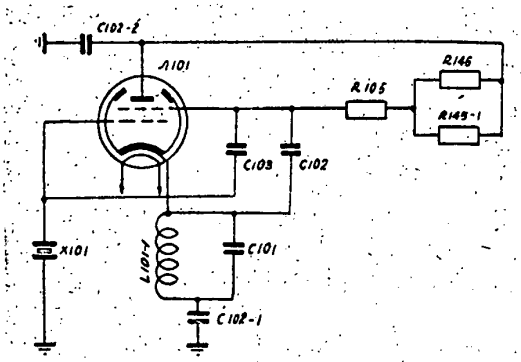

Fig.2-3. Schematic diagram of the crystal oscillator for the first harmonic frequency of the crystal.

The anode circuit of this stage consists of a variable condenser C.107 (C.max.= 29 ppF, C.min.= 4 ppF) and an inductance coil L.106. It is tuned to the third harmonic frequency of vacuum tube ..102 (to the 6 th. harmonic frequency of the crystal) and thereby covers the frequency range from 33.33 to 50 Mc.

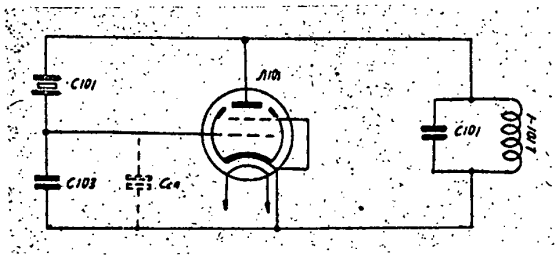

Fig. 2-4. Equivalent schematic diagram of the crystal oscillator for the first harmonic frequency of the crystal.

The necessary supply voltages for the anode and screen grid of vacuum tube 6 6C come from contact 37 of the terminal board ..106 via the contacts 1 of terminal board ..103-1 and ..102-1, a shunting resistor .....

SECRET
NO FOREIGN DISSEM
Declassified in Part - Sanitized Copy Approved for Release 2013/10/18 : CIA-RDP80T00246A071100330001-5

Declassified in Part - Sanitized Copy Approved for Release 2013/10/18 : CIA-RDP80T00246A071100330001-5
NO FOREIGN DISSEM

50X1-HUM

shunting resistor R.104 and either of the dropping resistors R.145-3 and R.110 (see the schematic diagram of the transmitter).

The required vacuum tube control grid bias of the first tripler comes from a voltage divider via contacts 13 of terminal board P.103-1 and P.102-1 and the self bias resistor R.108. A bias of - 300 V is brought to the voltage divider from contacts 51 of terminal board P.105. Beside this, the control grid receives self bias from the resistor R.109 by passed by the condenser C.102-6.

The 6.3 V filament voltage comes from contacts 137 and 138 of the terminal board P.104.

The condenser C.109 blocks the anode supply voltage of the first tripler vacuum tube and the condenser C.102-7 blocks the screen grid. The condenser C.103-3 blocks the bias circuit of the shunting resistors of the milliampermeter H.101. The condenser C.102-5 blocks the filament circuit of tube ...102.

Fig. 2-5. Schematic diagram of the first tripler.

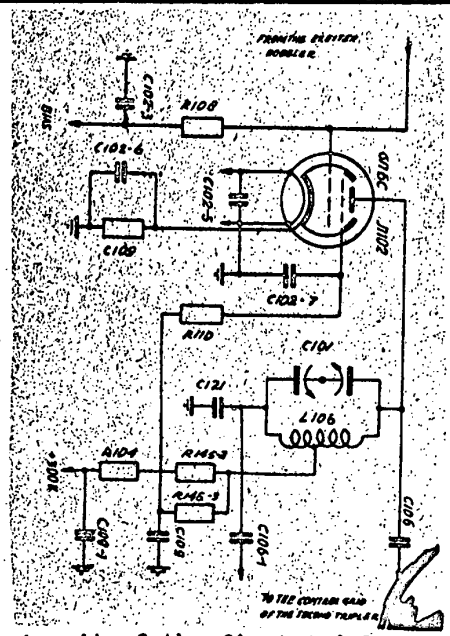

The anode circuit of the first tripler is tuned to the third harmonic of the anode current of the vacuum tube of this stage (..102) by adjustment for maximum current of the following stage - the second tripler .....

Declassified in Part - Sanitized Copy Approved for Release 2013/10/18 : CIA-RDP80T00246A071100330001-5

Declassified in Part - Sanitized Copy Approved for Release 2013/10/18 : CIA-RDP80T00246A071100330001-5
NO FOREIGN DISSEM

50X1-HUM

- the second tripler - by means of the meter ..101. The meter .. 101 is connected in parallel to the shunting resistor R.105 in the anode circuit of tube ..103 of the second tripler by means of the selector switch .... 101 (position "2").

The second and third stages are capacity coupled. The exciting voltage is brought to the third stage across the coupling condensers C.106 and C.106-1.

The second tripler. The third stage (fig.2-6) is connected in push-pull and uses a type BY-32 (103) ultra high frequency double beam tetrode as a frequency tripler.

The anode circuit of this stage consists of a variable condenser C.108 (Cmax.= 19 F, Cmin. à 3.5 F) and a single twin inductor coil L.107 and is tuned to the third harmonic of the vacuum tube (103) current of this stage (to the sighteenth harmonic of the crystal and covers the frequency ragge from 100 to 160 Mc - i.e. the working range of the transmitter.

The anode supply voltage is brought to the center of the single twin coil of the anode circuit from contact 37 of the terminal board ...105 over contacts 1 of terminal boards 103-1 and shunting resistor R.105 (see the transmitter schematic diagram).

The screen grid supply voltage of vacuum tube Y-32 comes from the same contact 37 of terminal board 105 over contacts 1 of terminal boards 103-1 and 102-1 and dropping resistor R.111.

The control grid bias comes from the voltage divider over contacts of terminal boards 103-1 and 102-1 and decoupling resistors R.102 and R.102-2.

The cathode of vacuum tube 103 is grounded.

The 6,3 V filament voltage comes g from contacts 137 and 138 of terminal board 104.

SECRET
NO FOREIGN DISSEM
Declassified in Part - Sanitized Copy Approved for Release 2013/10/18 : CIA-RDP80T00246A071100330001-5

Declassified in Part - Sanitized Copy Approved for Release 2013/10/18 : CIA-RDP80T00246A071100330001-5
NO FOREIGN DISSEM

50X1-HUM

The condenser C.102+9 blocks the control grid circuit bias of the second tripler.

The tripler anode circuit is tuned to the third harmonic of the anode current of the following stage, the first power amplifier, to maximum current by means of milliampermeter ..101. In this case the switch....101 (in position "3") connects the meter ...101 in parallel to shunting resistor R.105-1 which is connected in the cathode circuit of the g vacuum tube (..103-1) of the first power amplifier.

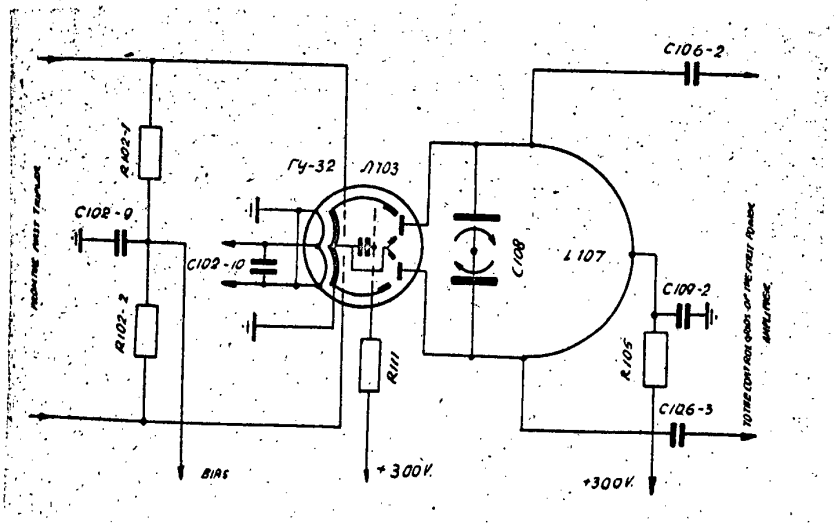

Fig. 2-6. Schematic diagram of the second tripler.

The third and fourth stages are capacity coupled by means of the coupling condensers C.106-2 and C.106-3.

First power amplifier. The fourth stage (fig.2-7) is a push-pull amplifier using a twin-ultrashortwave beam tetrode PY-32 (103-1) and works as a power amplifier. Its power output is necessary for driving the following fifth stage.

The anode circuit of this stage consists of a variable condenser C.110 (Cmax.= 16 F, Cmin. = 3 F) and a single twin induction coil L.108 tuned to the working frequency range (100 to 160 Mc).

SECRET
NO FOREIGN DISSEM
Declassified in Part - Sanitized Copy Approved for Release 2013/10/18 : CIA-RDP80T00246A071100330001-5

Declassified in Part - Sanitized Copy Approved for Release 2013/10/18 : CIA-RDP80T00246A071100330001-5
NO FOREIGN DISSEM

50X1-HUM

The anode supply voltage is brought to the center of the single twin coil L.108 from contact 49 of terminal board 104 (see transmitter schematic diagram).

The Y-32 tube screen grid voltage comes from contact 37 of terminal board 105 over contacts 1 of terminal boards 103-1 and ...102-1 and dropping resistors R.112 and R.112-1.

The bias voltage necessary for the control grids comes over contacts 13 of terminal boards 103-1 and 102 and the decoupling resistors R.118 and R.118-1 from the voltage divider.

The cathode of vacuum tube ..103-1 is grounded through the shunting resistor R.103-1 of the meter 101.

The 6,3 V. filament voltage is obtained from contacts 137 and 138 of terminal board 104.

The condenser C.111 together with the choke L.102 block the anode supply vacuum tube circuit of the first power amplifier stage.

The condenser C.102-13 blocks the bias grid circuits of the vacuum tube.

The blocking condenser C.132-1 prevents parasitic high frequency oscillations in the cathode circuit of the power amplifier.

The anode circuit of the first power amplifier stage is tuned to the fundamental (first) harmonic frequency of the anode current of the vacuum tube ..103-1 of the same stage by adjustment for maximum anode current of the second power amplifier by means of meter // 101 (the same one as used for the tuning of the first four stages). In this case the switch ..101 (position "4") connect the meter in parallel to the shunting resistor R.113 in the cathode circuit of the second vacuum tube (..104-1) of the second power amplifier.

SECRET
NO FOREIGN DISSEM
Declassified in Part - Sanitized Copy Approved for Release 2013/10/18 : CIA-RDP80T00246A071100330001-5

Declassified in Part - Sanitized Copy Approved for Release 2013/10/18 : CIA-RDP80T00246A071100330001-5
NO FOREIGN DISSEM

50X1-HUM

The fourth and fifth stages are inductively coupled by the single coupling twin coil L.115. The driver voltage is applied to the cathodes of the next stage vacuum tubes across the semi-variable coupling condensers C.112 and C.112-1.

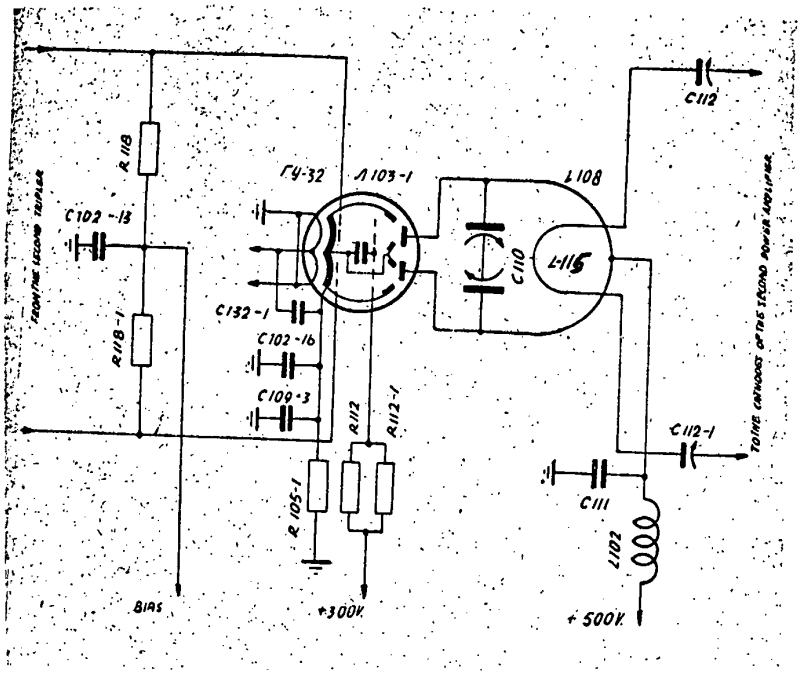

Fig. 2-7. Schematic diagram of the first power amplifier.

The second power amplifier (the fifth stage). The fifth stage (fig. 2-8) is a second power amplifier (power stage). It uses a push-pull circuit with a grounded or common grid with two type ... - Ж6 metal triodes (..106 and ..104-1).

As against the useal circuits (fig.2-9a), in the circuit with the grounded grid (fig. 2-9, which is the same as fig. 2-9) the anode circuit is connected between the anode and grid and the driving voltage is applied between the cathode and ground (chassis).

The un usual feature of the circuit with the grounded grid is the separation of input and output by shielding which the tube grid fulfills.

SECRET
NO FOREIGN DISSEM
Declassified in Part - Sanitized Copy Approved for Release 2013/10/18 : CIA-RDP80T00246A071100330001-5

Declassified in Part - Sanitized Copy Approved for Release 2013/10/18 : CIA-RDP80T00246A071100330001-5
NO FOREIGN DISSEM

50X1-HUM

As is evident from the equipment digram (fig.2-10) the coupling between the anode and cathode circuits(for exciting purposes) is formed by the inductance of the grid lead Ls and the anode-to-cathode capacity Cak. Therefore the vacuum tubes used in these circuits must have a very small anode-to-cathode Cak capacity and a small grid lead inductance Lc. The high frequency metal-ceramic ...-78 triode fulfills these requirements, since Cak = 0,055 ÷ 0,095 ppF and is used in the second and inthe output power amplifier of the high frequency transmitter section.

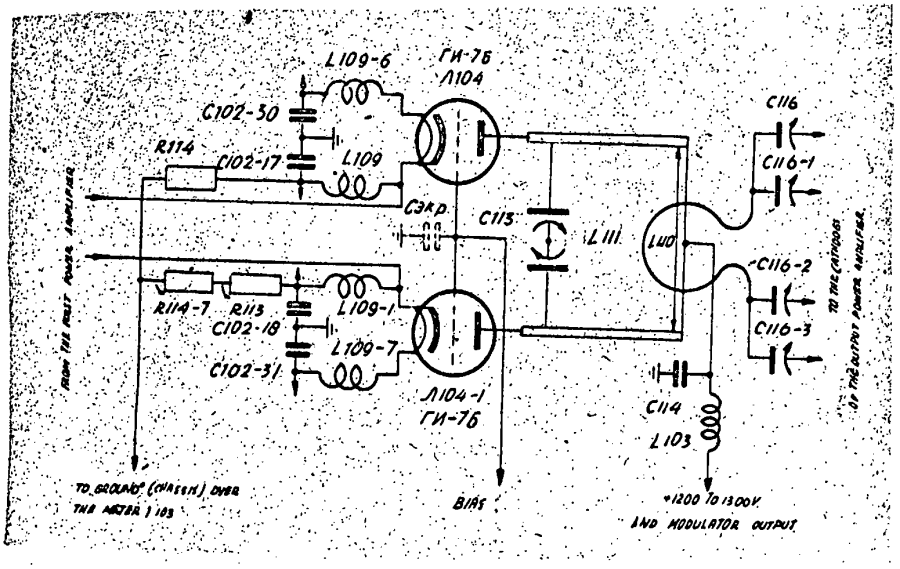

Fig. 2-8. Schematic diagram of the second power amplifier.

The km. to the great reduction of the coupling between the input and output tube circuits, the amplifier is capable of stable operation even without neutralization. Since the circuit does not use neutralizing condensers nor some other components, the circuit has been considerably simplified which naturally simplifies the design of the power amplifier stages.

SECRET
NO FOREIGN DISSEM
Declassified in Part - Sanitized Copy Approved for Release 2013/10/18 : CIA-RDP80T00246A071100330001-5

Declassified in Part - Sanitized Copy Approved for Release 2013/10/18 : CIA-RDP80T00246A071100330001-5
NO FOREIGN DISSEM

is evident from the diagram on fig. 2-9 , the first harmonic of the ode tube current Ia_1 flows not only through the oscilator anode cir- lt , but also through the output circuits and its exciters (of the prece stage). With the circuit tuned , the anode voltage Ua , as usually , is phase opposition with thegrid voltageUc. As against the usual circuits lg. 2-9a) , in the circuit with the grounded grid (fig. 2-9a) the tuned ode circuit is connected between the anode and grid and the voltage Uac+ Uc. Therefore the circuit voltage will be

$$Uk = Uac = Ua + Uc.$$

By multiplying both side of the aquation by 1/2 Ia_1 we obtain

$$\frac{Uk.Ia_1}{2} = \frac{Ua.Ia_1}{2} + \frac{Ua.Ia_1}{2}$$

The left side of the equation represents the output in the anode circuit (Pk). The first expression on the right hand sideof the equation is nothing else than the alternating current power delivered by the tube P and the second expression represent the power which we shall designate as Ps. Therefore ,

$$Pk = P + Pc.$$

From this it follows that the power in the anode circuit is greater than the alternating current power generated in the tube by the amount Pc. This power is delivered into the anode circuit by the preceeding stage the driver).For the high frequenties the grid is grounded by a capaci- tance which includes the capacitance C kp , which is the capacitybetween the internal (grid)shielding which is conductivelyconnected to the trans- etterchassis. Both shields are bbuot the cathode.

The anode circuit of this stage (see Fig. 2-8) consist of a variable ondenser C 113 (Cmax. = 21 uuF and Cmin. = 5.3 uuF) d the two parallel cylendrical tubes with a shorting bar , which

50X1-HUM

Declassified in Part - Sanitized Copy Approved for Release 2013/10/18 : CIA-RDP80T00246A071100330001-5

Declassified in Part - Sanitized Copy Approved for Release 2013/10/18 : CIA-RDP80T00246A071100330001-5
NO FOREIGN DISSEM

fulfill the role of an inductance (L 111) in this circuit which is adjustable for frequencies from 100 to 160 Mcpe.

The neceesary anode voltage for the -7 vacuum tube comes from the high voltage contact 123 (06) over the choke L103 (see the schematic diagram of the transmitter.) The grid bias voltage comes directly from the bias voltage divider.

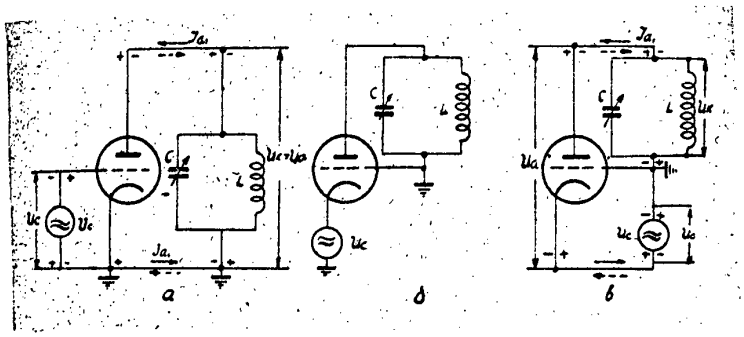

Fig. 2-9. schematic diagrams (for the various alternatives) of electronic amplifiers.

The filament voltage (12.6v) comes from contacts 125 and 126 (for the vacuum tube 10⁴) and contacts 127 and 128 for the vac uum tube 10⁴-1) of the therminal board 10⁴.

The C114 condenser and the L103 choke block the anode supply circuit of the -7B tubes. The choke , L109 -1 and the condenser C 102-17 , C 102-18 block the cathode circuits of the fifth stage tubes and chokes L109-6 , L109-7 and condensers C102-31 block the filament circuits of these tubes.

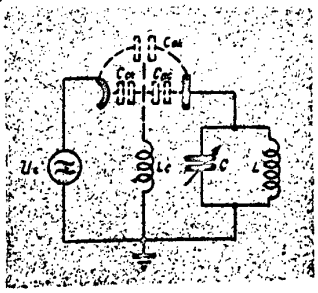

Fig. 2-10 Equivalent schematic diagram of an amplifier with a grounded grid.

Declassified in Part - Sanitized Copy Approved for Release 2013/10/18 : CIA-RDP80T00246A071100330001-5

Declassified in Part - Sanitized Copy Approved for Release 2013/10/18 : CIA-RDP80T00246A071100330001-5
NO FOREIGN DISSEM

50X1-HUM

The tuning of the second power amplifier anode circuit for the first harmonic frequecy of the anode current of the tubes 104 and 104-1 is performed by adjusting the total grid current of the tubes of the following stage , the sixth stage , for maximum current values by means of the milliamperemeter 105 blocked by the c102-22 condenser a and which is converted in the grid circuit of the sixth stage tubes.

Symmetrization of the branches of this stage , i.e.equalization of the current flowing through each tube , is accomplished by means of the 102 milliamperemeter by changing the capacity of the semi-adjustable coupling condensers c112 and C112-1 connected in the output of the preceeding stage.

The 102 meter is blocked by the C102-19 condenser and by means of the 102 selector switch (in the left position "1" and "2") it is alternately connected to the R114 and R114-1 shuntingresistors which are connected in the cathode circuits of the second power amplifier tubes (104 and 104-1)

For the same reason , i.e. for facilitating the equalization of the branches of this stage , inductive coupling is used between the first and second power amplifiers as against capacitive coupling used in the previous stages.

The fifth and sixth stages are inductively counled by means of the coupling loop L110.

The driving voltage is brought to the cathodes of the sixth stage across the semi adjustable coupling condensers C116-. C116-2 and 116-3;

The output power amplifier (the sixth stage). The sixth tage (fig. 2-11) is a puch-pull output power amplifier with rounded grids and four metal ceramic type -7 triodes 04-2., 104-3 , 104-4 and 104-5) with two vacuum tubes connected in arallel in each brach.

Declassified in Part - Sanitized Copy Approved for Release 2013/10/18 : CIA-RDP80T00246A071100330001-5

Declassified in Part - Sanitized Copy Approved for Release 2013/10/18 : CIA-RDP80T00246A071100330001-5
NO FOREIGN DISSEM

50X1-HUM

For the high frequencys the grids are grounded by a capacity which includes the inter-schielding capacity C kp , both the anode and enveloppe ones , which are about the anode.

The anode circuit consists of the C115 condenser (Cmax.= 25.6 uuF , Cmin. = 7,6 uuF and two parallel oval tubes and a shorting bar , which fulfill the rols of the circuit inductance (L113). The anode circuit is tuned to the first harmonic frequency of the anode current of the sixth stage tube and covers the frequency working range from 100 to 150 Mcps.

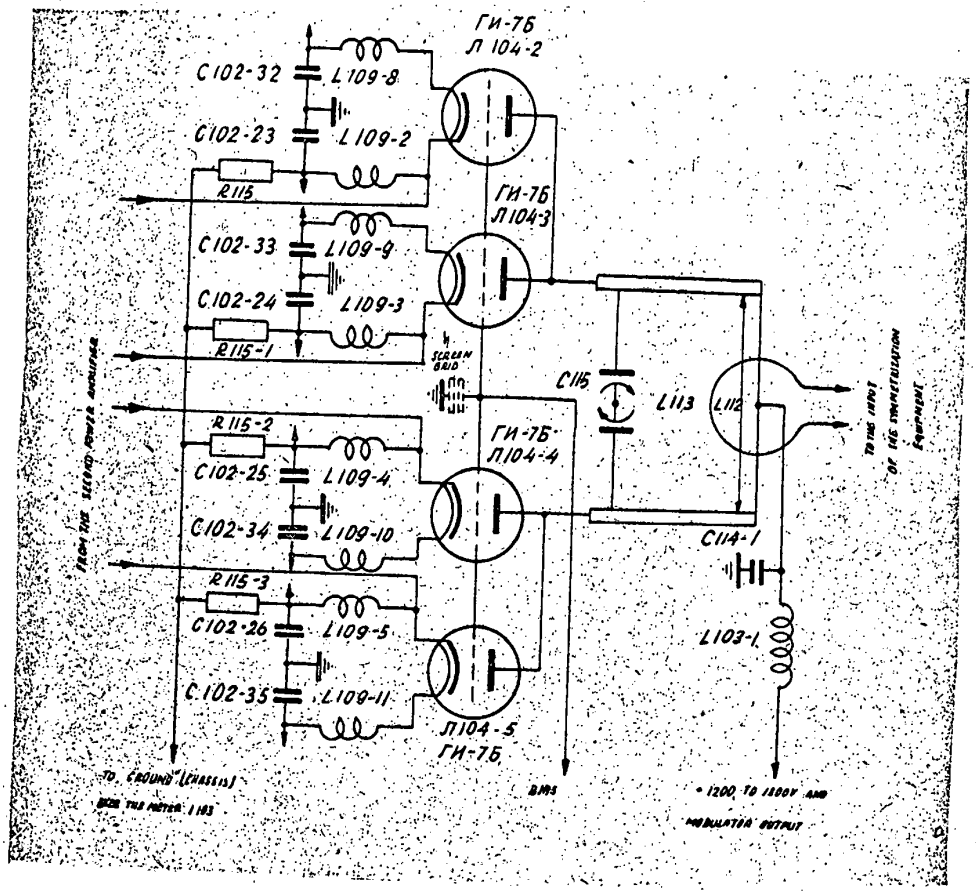

Fig. 2-11. Schematic diagram of the output power amplifier.

SECRET
NO FOREIGN DISSEM
Declassified in Part - Sanitized Copy Approved for Release 2013/10/18 : CIA-RDP80T00246A071100330001-5

Declassified in Part - Sanitized Copy Approved for Release 2013/10/18 : CIA-RDP80T00246A071100330001-5
NO FOREIGN DISSEM

50X1-HUM

The anode voltage supply is brought to the center of the shorting bar of the two oval tubes from the high voltage terminals 124 (..106) across the L.103-1 choke (see the transmitter schematic diagram).

The grid bias necessary for the grids of the ..-76 tubes comes across resistors R.153, R.154-1, R.152-1, R.152-2 and milliamperometer ..103 from the bias voltage divider which, as mentioned above, is supplied with -300 V. from contact 51 of terminal board P.105. Besides this, from these very resistors comes the bias for the automatic volume control voltage.

The filament voltage (12.6 V) comes from contacts 129 and 130 (for vacuum tube ..104-2), from the contacts 131 and 132 (for the vacuum tube ..104-3), from contacts 133 and 134 (for the vacuum tube ..104-5) of the terminal board ..104.

The condenser C.114-1 and the choke L.103-1 are used for blocking the anode circuit of the tube ....-78.

The ~~xxxxx~~ chokes L.109-2, L.108-3, L.108-4, L.108-5 and the condensers C.102-23, C.102-24, C.102-25, C.102-26 block the cathode circuits of the sixth stage tubes and the chokes L.109-8, L.109-9, L.109-10, L.109-11 and the condensers C.102-32, C.102-33, C.102-34, C.102-35, block the filament circuits of these tubes.

Tuning of the output power amplifier anode circuit to the first harmonic frequency of the anode current of this stage is accomplished by adjustment of the tube current (..104 and ..104-1) flowing through milliamperometer ..10.., whose deflection depends on the amplitude of the amplitude of the high frequency in the power amplifier circuit, for maximum value. The meter ,,106 is blocked by condenser L.102-28 and is located in the modulation monitor connected to the output power amplifier by coupling loop L.114 and the high frequency cable K.10

Equalization of the.....

SECRET
NO FOREIGN DISSEM
Declassified in Part - Sanitized Copy Approved for Release 2013/10/18 : CIA-RDP80T00246A071100330001-5

Declassified in Part - Sanitized Copy Approved for Release 2013/10/18 : CIA-RDP80T00246A071100330001-5
NO FOREIGN DISSEM

50X1-HUM

Equalization of the toal ~~x~~ current flowing through each tube of the output power amplifier is accomplished with the aid of milliampermeter ..102 by means of the semi-adjustable coupling condensers C.116, C.118-1, C.116-2 and C.116-3, which are connected in the output of the previous stage (the second power amplifier). The ..102 meter is alternately connected by the selector switch ..102 (in the left positions "1", "2", "3" and "4") to the shunting resistors R.115, R.115-1, R.115-2 and R.115-3 which are connected in the cathode circuits of the output power amplifier tubes (..104-2, ..104-3, ..104-4, and ..104-5).

The common (total) grid current of the ~~six~~ sixth stage tubes is measured by milliampermeter ..103.

The total (anode and grid) tube current of the second and output power amplifier (power stages) is measured by the ..103 ammeter. The meter ..103 is blocked by the C.102-20 condenser.

The coupling of the output power amplifier with the antenna feeding equipment is inductive and is accomplished by means of the coupling loop L.1112.

Symmetrization equipment. The sixth stage (the output power amplifier) works as a push-pull circuit and has a symmetrical output.

Energy transmission from the transmitter to the antenna is accomplished by a coaxial feeder (by a type PK-6 high frequency cable with an impedance of 50 ohms), consisting of two sections K.101 and K.102 (see fig.2-12) which is assymmetrical.

The transition from the symmetrical transmitter output to the assymmetrical coaxial feeder in the transmitter is accomplished by special symmetrization equipment (see fig. 2-12).

It is obvious that the direct connection of the coaxial feeder (cable) to the.....

Declassified in Part - Sanitized Copy Approved for Release 2013/10/18 : CIA-RDP80T00246A071100330001-5

Declassified in Part - Sanitized Copy Approved for Release 2013/10/18 : CIA-RDP80T00246A071100330001-5
NO FOREIGN DISSEM

50X1-HUM

symmetrical leads of the coupling loop of the transmitter output stage creates current dissymmetry in the coaxial cable (feeder).

Figure 2-13 shows the diagram of this type of transmitter output lead. The inside wire (conductor) of the coaxial cable is connected to one end of the transmitter output stage coupling loop and the cable envelops to the other one. The current advancing from the coupling envelope, but beside this partially branches off at point "a" to the outer surface of the envelope. The branching-off current " "spreads out" on the outer surface of the envelope and partially radiates from this surface and partially returns to the inner conductor across the"cable envelope (feeder) - coupling loop" capacity.

The resultant current amplitudes at any two symmetrical points on the inside conductor feeder envelope inside surface, as e.g. points "...." and "...." differ from each other. Symmetrization of the transmitter output load is obtained by a band pass (broad band) symmetrization equipment, the function of which is based on using a special combination of a symmetrization extention with an enclosing cylinder.

Figure 2-14 shows the connection of the symmetrization equipment.

The symmetrization equipment consists of a quater wavelength transformer, a symmetrization extention and an enclosing cylinder.

The quater wavelength transformer used for matching the load resistance (the coaxial feeder impedance with the impedance of the supply line) to the coupling loop is a piece of coaxial cable equals a quater of the average wavelength (2.4 meters).

loop does not only flow on the inner surface of the cable

SECRET
NO FOREIGN DISSEM
Declassified in Part - Sanitized Copy Approved for Release 2013/10/18 : CIA-RDP80T00246A071100330001-5

Declassified in Part - Sanitized Copy Approved for Release 2013/10/18 : CIA-RDP80T00246A071100330001-5
NO FOREIGN DISSEM

50X1-HUM

of the operating band (2 to 3 meters). The average wavelength (2,4 meters) corresponds to the average frequency of the band, 121 Mcps. The inner transformer conductor is connected by the loop to the symmetrization extention. The symmetrization extention is a conductor of the same diameter as is the outside diameter of the outside conductor of the transformer. The quater wavelength transformer and the symmetrization extention are located inside and enclosing cylinder and are connected to the bottom of the enclosing cylinder. The symmetrization extention as well as the enclosing cylinder have a length equal to a quater of the average wavelength.

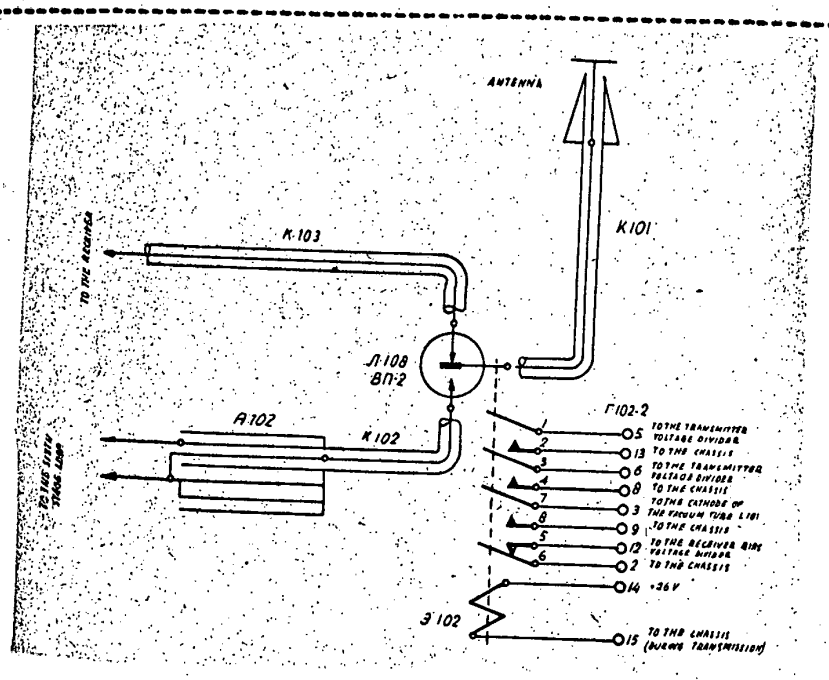

Fig. 2-12. Schematic diagram of the symmetrization equipment, the reception-transmission relay and the antenna feeder system.

The loads of the coupling loop are connected to the outer conductor of the transformer (on the input end) and to the symmetrization extention. The transformer output end is connected with the unsymmetrical load by a coaxial feeder.

SECRET
NO FOREIGN DISSEM
Declassified in Part - Sanitized Copy Approved for Release 2013/10/18 : CIA-RDP80T00246A071100330001-5

Declassified in Part - Sanitized Copy Approved for Release 2013/10/18 : CIA-RDP80T00246A071100330001-5
NO FOREIGN DISSEM

50X1-HUM

with the unsymmetrical load by a coaxial feeder.

The purpose of using the enclosing cylinder and the symmetrization extention in this symmotrization equipment is to make use of the propertids of a section of a short-circuited transmission line equal in length to a quater wavelength. From the transmission line theory it is known that on a short-circuited resonant line with an alternating current generator connected to its input, appear standing current and voltage waves and that the voltage and current magnitudes at various points of the resonant line will have various magnitudes. At the short-circuited end of the line the voltage will be equal to zero whereas the current will be at its maximum (see fig. 2-15).

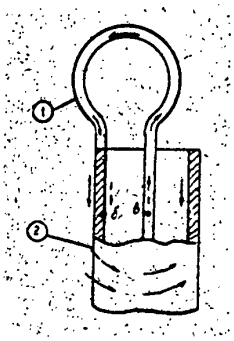

Fig. 2-15. Current distribution on the outside surface of the feeder when it is connected to the symmetrical output of the transmitter:

1-coupling loop of the transmitter output stage;
2-coaxial feeder.

By making use of the relation between the voltage and current (U=IZ) for determining the impedance of the line, it is possible to determine the magnitude of the input impedance at any point along the tfahsmission line as $Z = \frac{U}{T}$.

A curve of the short-circuited transmission line input impedance distribution is shown by fig.2-15.

When the short-circuited resonant line length equals a quarter wavelength, then its input ompedance will have a large value for any voltage.....

SECRET
NO FOREIGN DISSEM
Declassified in Part - Sanitized Copy Approved for Release 2013/10/18 : CIA-RDP80T00246A071100330001-5

Declassified in Part - Sanitized Copy Approved for Release 2013/10/18 : CIA-RDP80T00246A071100330001-5
NO FOREIGN DISSEM

50X1-HUM

any voltage source (see fig. 2-15a).

When the short circuited resonant line is of greater or smaller length than a quater wavelenth, its input impedance will be smaller than in the first case (see fig. 2-15 6 and ....).

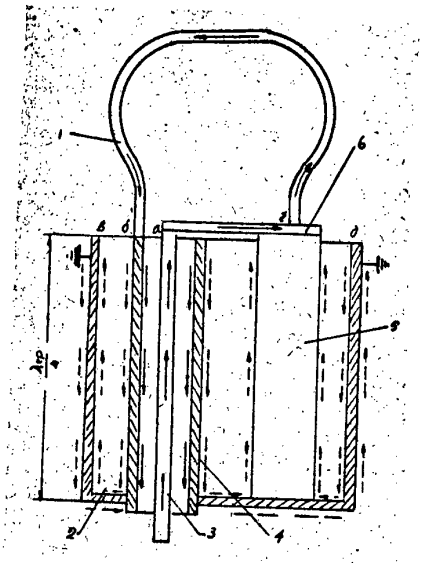

Fig. 2-14. Schematic diagram of the symmetrization unit; 1-transmitter sixth stage coupling loop; 2-bottom connection; 3-inner conductor of the transformer; 4-outer conductor of the transformer; 5-symmetrization member; 6-connecting link.

The outer surface of the outer transformer and symmetrization extention conductor starting at the point where the coupling connector is attached, represents a section of a short-circuited resonant line equal in length to a qater transformer conductor and the inner surface of the enclosing cylinder on the one side and the extention with the inner surface of the enclosing cylinder on the other side represent sections of excentric short-circuited resonant lines each equal in length to a quater of the average wavelength.

It is therefore possible to assume that between the points

SECRET
NO FOREIGN DISSEM
Declassified in Part - Sanitized Copy Approved for Release 2013/10/18 : CIA-RDP80T00246A071100330001-5

Declassified in Part - Sanitized Copy Approved for Release 2013/10/18 : CIA-RDP80T00246A071100330001-5
NO FOREIGN DISSEM

50X1-HUM

"6" and "...." (the points for connecting the loop) (see fig. 2-16) the following are connected (see fig. 2-16. a):

- a quater wavelength transformer
- a two conductor short-circuited resonant line of a length equal to one quater of the average wavelength.
- two excentric short-circuited transmission lines in series each of which also has a length equal to a quater of the average wavelength.

Each of these resonant lines represents an impedance Z.

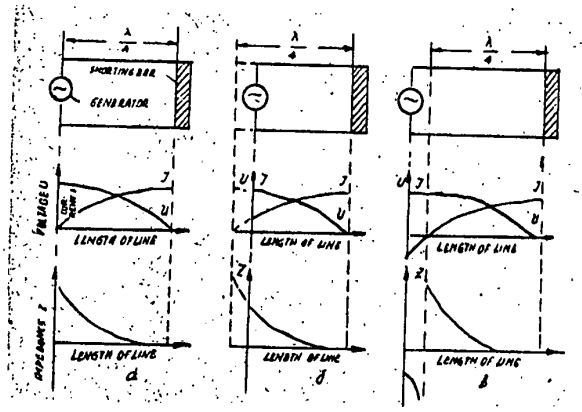

Fig. 2-15. Voltage distribution, current distribution and short-circuited line input impedance distribution.

It is therefore possible to draw an equivalent diagram of the symmetrization equipment in the form given by fig. 2-16a which it is possible to transform to fig. 2-166, where Z = input impedance of the transformer (load), Z.... = input impedance between points "6" and "..." of the two conductors short-circuited resonant line represented by the symmetrization extention. Z... and Z... = input impedance of the excentric short-circuited resonant line represented by the outside surface of the outside transformer conductor and the inside surface of the enclosing cylinder (between points "6" and "....) and the.....

SECRET
NO FOREIGN DISSEM
Declassified in Part - Sanitized Copy Approved for Release 2013/10/18 : CIA-RDP80T00246A071100330001-5

Declassified in Part - Sanitized Copy Approved for Release 2013/10/18 : CIA-RDP80T00246A071100330001-5
NO FOREIGN DISSEM

and the symmetrization extention and the inside surface of the enclosing cylinder (between points "...." and "....").

Each of the short-circuited resonant lines is one quater of the average wavelength and represents a high impedance for the average frequency of the band (fcp - 123 Mcps) current.

In this case the entire average frequency current advances along the inside conductor and the inside surface of the outer transformer conductor and does not branch off on the outer surface of the outer transformer and extention conductors.

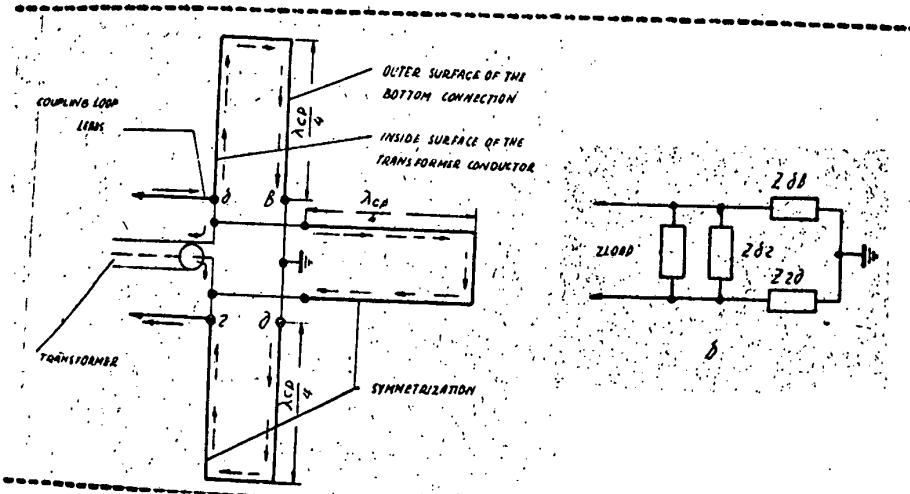

Fig. 2-16. Equivalent schematic diagram of the symmetrization unit.

In this way a complete symmetry is set up on the inside conductor and the outer surface of the outer transformer conductor (and naturally also on the inner conductor and outer surface of the coaxial cable envelope).

At frequencies differing from the average frequency of the banf (fcp = 125 Mcps) the resonant line input impedance - the impedance at the above mentioned points of the symmetrization equipment - becomes smaller than at the average frequency and therefore currents appear.....

SECRET
NO FOREIGN DISSEM
Declassified in Part - Sanitized Copy Approved for Release 2013/10/18 : CIA-RDP80T00246A071100330001-5

Declassified in Part - Sanitized Copy Approved for Release 2013/10/18 : CIA-RDP80T00246A071100330001-5
NO FOREIGN DISSEM

on the surface of the outer transformer conductor, on the surface of the extension and also on the surface of the enclosing cylinder. However, thanks to the complete symmetry of the entire equipment, complete current symmetry is maintained on the inside conductor and on the inside surface of the outer transformer conductor.

Fig. 2-14 and fig.2-16 illustrates by dashed arrows the paths of these branching-off currents.

Besides, the lead of the coupling loop which is connected to the outer transformer conductor is insulated from points "..." and "...." which are connected to the body (ground) of the enclosing cylinder and both loads of the coupling loop become symmetrical with respect to ground.

The receive-transmit relay. Simplex and semi-duplex communication is accomplished with a single antenna and therefore it is necessary to arrange for switching of the antenna from the transmitter to the receiver and vice versa. Besides this when using semi-duplex communication it is necessary to interrupt the operation of the transmitter during reception and to interrupt the operation of the receiver during transmission.

This is accomplished by the reception-transmission relay (see fig. 2-12) which consists of an electromagnetic relay -)102, a type B..-.. vacuum selector switch (...108) - an evacuated tube containing three contacts (two fixed ones and one movable one)- and terminal board ..102-2.

One of the fixed contacts of the vacuum switch (..108) is connected to the feeder K.102 coming from the transmitter symmetrization equipment and the other contact is connected to the feeder K.101 which leads to the antenna.

The contacts 7 and 8 of relay ♦)102 are connected in the cathode circuit of the crystal oscillator-doubler vacuum tube ...101 (6..6C).

The contacts 1 and....

NO FOREIGN DISSEM
Declassified in Part - Sanitized Copy Approved for Release 2013/10/18 : CIA-RDP80T00246A071100330001-5

Declassified in Part - Sanitized Copy Approved for Release 2013/10/18 : CIA-RDP80T00246A071100330001-5
NO FOREIGN DISSEM

50X1-HUM

The contacts 1 and 3 are connected to the common points of the resistors R.152 and R.151-6 of the bias voltage divider in the transmitter. Contact 3 is connected to the common point of resistors R.277, R.279 and R.238 of the receiver bias voltage divider. Contacts 2,4,6,8 are connected to the chassis of the transmitter (ground).

To one end of the +)102 relay coil +26 volts is brought from contact 12 of the terminal boards ..103-2 and ..102-2. The other relay coil lead is connected to the minus 26 volt (chassis) across the microphone push buttons (when these are depressed), contact 111 of terminal board ..405 and ..105 and contact 15 of terminal board ..103-2 and ..102-2. When the -)102 relay is energized, the movable contact of the vacuum double throw switch connects the antenna to the transmitter and simultaneously disconnects it from the receiver.

Besides this, when the -)102 relay is energized it performs the following operations:

1) It connects the chassis (minus of the anode supply) to the cathode of the crystal oscillator-doubler tube (..101).

2) It reduces the bias of the control grids of all transmitter tubes (unblocks the tubes and thereby also unblocks the transmitter) by short-circuiting the R.152-6 resistor in the transmitter bias voltage divider and by connecting the chassis to resistor R.148 the modulator bias voltage divider.

3) It raises the bias of the receiver control grids by disting the common point of resistors R.277, R.279 and R.238 bias voltage divider from the chassis (blocking the receiver). ter de-energizing the -)102 relay, the antenna is connected ceiver.

SECRET
NO FOREIGN DISSEM
Declassified in Part - Sanitized Copy Approved for Release 2013/10/18 : CIA-RDP80T00246A071100330001-5

Declassified in Part - Sanitized Copy Approved for Release 2013/10/18 : CIA-RDP80T00246A071100330001-5
NO FOREIGN DISSEM

50X1-HUM

Besides this when the -)102 relay is de-energized its contacts performs the opposite operations mentioned above as follows:

1) disconnection of the chassis from tube ..101,

2) transmitter blocking (by increasing the bias of all control grids of all vacuum tubes),

3) unblocking of the receiver.

The control of the -)102 relay (energizing and de-energizing) is accomplished by means of the push button on the microphone handle or by the push button on the microphone handle or by the push button of the throat microphone cord switch. With the push button depressed the energizing circuit of the relay coil is completed and the relay closes. With the push button released the circuit is interrupted and the relay opens.

2. The audio frequency section.

The input circuits. The input circuits connect the modulating voltage sources with the pre-amplifier transformer of the transmitter audio frequency section (fig. 2-17). These circuits consist of the following components:

- connecting (jacks, binding posts, relay contacts, selector switches, terminal boards),
- compensating network (compensating circuit),
- control (manual modulation level control PPTM)
- modulation voltage amplitudes control (vacuum tube voltmeter).

Modulation voltage sources may be the following:

1) Type MPY-5 carbon microphone.

2) Type ..A-5 throat microphone (independently or in the helmet).

3) Remote control unit B..Y connected with the radio van by cables.

SECRET
NO FOREIGN DISSEM
Declassified in Part - Sanitized Copy Approved for Release 2013/10/18 : CIA-RDP80T00246A071100330001-5

Declassified in Part - Sanitized Copy Approved for Release 2013/10/18 : CIA-RDP80T00246A071100330001-5

The type MPY-7Б microphone is connected to the jack Ç.402 ("M") by a plug. Transition from reception to transmission during semi-diplex communication is accomplished by the push button on the microphone handle (see the schematic control diagram of the radio communication unit in the appendix).

The type ..A-5 throat microphone (independent or in the helmet) is connected over a push button switch in the microphone cord to jacks ..403 with the inscription "_____" ("helmet phone").

Transition from reception to transmission during semi-duplex communication is accomplished by the cord push button switch.

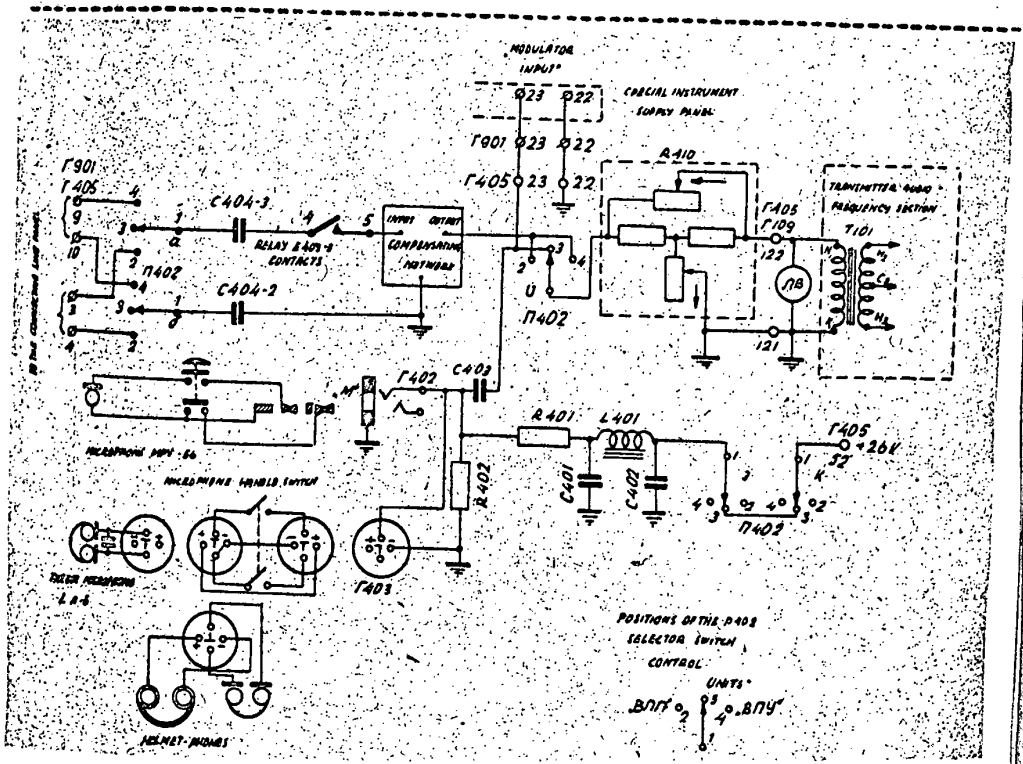

Fig. 2-17. Schematic diagram of the transmitter audio section section input circuits.

When using the throat microphone directly in the radio van the "....."("control units") selector switch N.402 is set to position "....."(central control unit"). The -26 volt microphone supply.....

Declassified in Part - Sanitized Copy Approved for Release 2013/10/18 : CIA-RDP80T00246A071100330001-5

Declassified in Part - Sanitized Copy Approved for Release 2013/10/18 : CIA-RDP80T00246A071100330001-5
NO FOREIGN DISSEM

50X1-HUM

supply microphone/voltage comes from contact 52 of the terminal board 405 over the ..402 selector switch sections "..." and "...." over the ... type filter consisting of condensers C.402 and C.401 and choke L.401, and is brought to the voltage divider consisting of resistors R.401 and R.402. The audio frequency pre-amplifier over blocking condenser C.403 section ".." of selector switch ..402 and the manual modulation level control.

When operating the radio communication unit from the remote control unit the ..402 selector switch is set to the respective "B..T" position. Then the carbon or throat microphone circuit is and the wires conducting the audio voltage from all sources of audio frequency in the radio van are disconnected from the manual modulation level control.

The audio signal from the tranmission line connecting the remote control unit B..Y with the radio van is brought the primary winding of the T.101 transformer over the selector switch ..402 sections "a" and "...", the blocking condensers C.404-2 and C.404-5, the line relay -)402-3 contacts 4 and 5, frequency compensating network, section "..." of the selector switch ..402 and the manual modulation level control R.410.

The manual modulation level control (PPPM) is used for signal attenuation and is designed as a symmetrical bridge circuit of the T shape. The modulation control input and output resistances are 600 shape. The modulation control input and output resistances are 600 ohms each. The maximum attenuation is about 40 decibels (db). The attenuation changes in steps of 1.6 db. The control has 29 steps. Above the control handle on the panel is the inscription "_____"("modulation level control"). The unusual feature of such a control circuit as against an ordinary potentiometer...

Declassified in Part - Sanitized Copy Approved for Release 2013/10/18 : CIA-RDP80T00246A071100330001-5

Declassified in Part - Sanitized Copy Approved for Release 2013/10/18 : CIA-RDP80T00246A071100330001-5
NO FOREIGN DISSEM

50X1-HUM

lies in the fact that the input and output resistances remain the same in every position and, as a result of this, the frequency characteristic of the amplification stage is not altered by the control. Besides, such a regulator is particularly necessary in conjunction with a transmission line; the audio frequency on the transmission line output is not sufficiently reduced because in this case no reflections take place.

The compensating network is used for compensating the frequency characteristic of the transmission line attenuation and reduces the frequency distortion of the modulating voltage brought from the remote control equipment.

The amplitude of the audio frequency brought to the primary winding of the input transformer T.101 is checked by the vacuum tube voltmeter (..B), whose circuit diagram and description is given in the third section of this paragraph.

The audio pre-amplifier. The pre-amplifier is used for amplification of the audio signal brought to its input to a level necessary for driving the control grids of the modulator tubes.

The amplifier consists of two stages (see fig.2-160. The first stage uses a resistance coupled push-pull circuit with a type CHBC twin triode (..105-1). The second stage uses a push-pull transformer circuit with two beam power tetrodes of the 6..6C type (..102-1 and ..102-2).

The audio signal applied to the input transformer T.101 primary winding is stepped up in each of the secondary windings with a transformation ration of 1.6. The resistors R.160 and R.150-1 shunt the secondary winding and are used for smoothing out the voltage surges of this winding which are caused by pressing and releasing the push buttons on the handle of the carbon microphone or on the cord switch of the throat microphone.

The signal.....

SECRET
NO FOREIGN DISSEM
Declassified in Part - Sanitized Copy Approved for Release 2013/10/18 : CIA-RDP80T00246A071100330001-5

Declassified in Part - Sanitized Copy Approved for Release 2013/10/18 : CIA-RDP80T00246A071100330001-5
NO FOREIGN DISSEM

The signal voltage is grounded across the blocking condenser C.135 in the grid to the cathode circuit of the 6R8C twin triode (R.105-1). The audio voltage amplified by the tube appears across the resistors R.128 and R.128-1 connected in the anode circuit of the tube. Grid bias becomes from the automatic volume control over the filter circuit C.128-3, R.108-3. The anode supply voltage (+300 V.) comes from contact 37 of the ..110 terminal board.

The signal voltage amplified by the first stage is coupled to the control grids (..102-1 and ..102-2) of the second stage by coupling condensers C.123 and C.123-1). The audio voltage amplified by these tubes appears across the T.102 coupling transformer and is transformed to the secondary H_3K_3 and H_4K_4 windings with a transformation ratio of 2 and to the secondary H_5K_5 winding with a transformation ratio of 0,75. From the windings H_3K_3 and H_4K_4 the voltage is delivered to the control grids of the modulator tubes. The H_5K_5 winding belongs to the automatic volume control system.

The resistors R.130 and R.131-1 which shunt the H_3K_3 and H_4K_4 windings and the resistors R.160 and R.160-1 together with the C.130 and R.130-1 condensers in the modulator tube grid circuits are used for more stable function of the modulator and of the preamplifier/ This will be described in detail during the description of the modulator. The direct current voltages for the 6..6Ж tube control grids are automatically formed across the R.129 resistor which is connected in between the cathode and "ground" (the chassis). The +300 V. anode and screen grid supply voltage comes from contact 37 of the ..110 terminal board.

The modulator. The third transmitter stage is the modulator which is an audio frequency power amplifier (see fig.2-18)/ This stage is designed as a push-pull circuit with two type PY-80

Declassified in Part - Sanitized Copy Approved for Release 2013/10/18 : CIA-RDP80T00246A071100330001-5

Declassified in Part - Sanitized Copy Approved for Release 2013/10/18 : CIA-RDP80T00246A071100330001-5
NO FOREIGN DISSEM

50X1-HUM

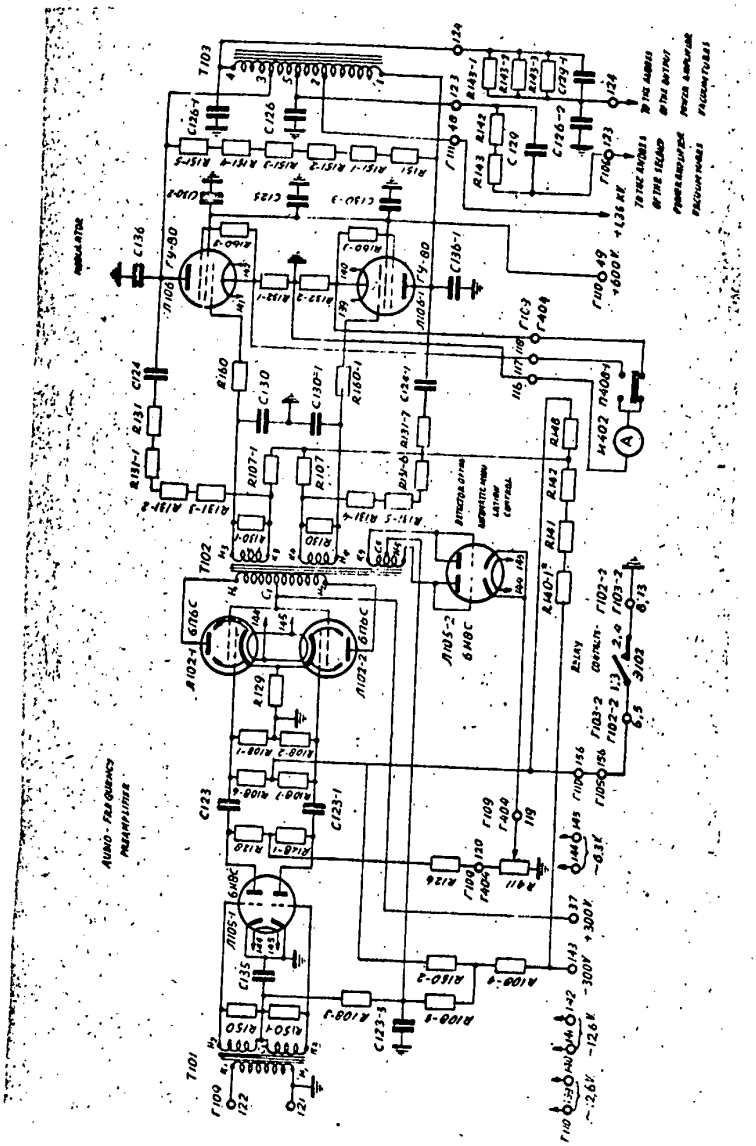

Fig. 2-18. Schematic diagram of the audio frequency pre-amplifier, modulator and automatic transmitter modulation level control.

SECRET
NO FOREIGN DISSEM
Declassified in Part - Sanitized Copy Approved for Release 2013/10/18 : CIA-RDP80T00246A071100330001-5

Declassified in Part - Sanitized Copy Approved for Release 2013/10/18 : CIA-RDP80T00246A071100330001-5
NO FOREIGN DISSEM

50X1-HUM

pentodes (..106 and ..106-1) working in clear AB_1 into an auto-transformer.

The audio frequency signal, amplified by two pre-amplifier stages, is applied to the control grids of the vacuum tubes ..106 (the "right") tube and ..106-1 (the "left" tube). The amplified signal transformer winding "1-3". This power output is then connected to the second and the output power amplifiers (the fifth and sixth stages) of the transmitter high frequency section for modulation of the high frequency.

The direct current bias (1-160 to -170 V) for the control grids of the modulator tubes comes from the resistor R.148 of the voltage divider consisting of resistors R.148, R.142, R.141 and R.-140-1 connected in series.

The anode voltage (1350 volt direct current) comes from terminal 48 of terminal board (..901 and is applied over the high voltage contacts 46 of the terminal board ..111 to the lead "2" of the autotransformer and from there to the windings "1-2" and "2-3" to the pentode anodes. The value of the anode voltage is checked by the voltmeter ..104 (see the transmitter circuit diagram). The R.116 resistor is a multiplier resistor and the C.102-21 condenser is a blocking condenser.

The +600 volt screen grid supply voltage comes from contact 49 of the terminal board ..110. The cathode circuit contains shunting resistors (R.132-1 and R.132-2) for the ameter ..402 with which it is possible to meter the total anode and screen grid current of each vacuum tube when cheking the symmetry of the branches of this stage. The ameter is connected to the respective shunting resistor by means of the double throw switch ..406-1.

The resistors R.169-2 and R.160-3 are connected in the vacuum

SECRET
NO FOREIGN DISSEM
Declassified in Part - Sanitized Copy Approved for Release 2013/10/18 : CIA-RDP80T00246A071100330001-5

Declassified in Part - Sanitized Copy Approved for Release 2013/10/18 : CIA-RDP80T00246A071100330001-5
NO FOREIGN DISSEM

50X1-HUM

tube suppressor grid circuits. The purpose of these resistors is to reduce the ultrahigh frequency parasite oscillations which may sometimes arise in the modulator stage. The resistors R.160 and R.160-1 in the vacuum tube control grid circuits and the resistors R.130 and R.130-1 which shunt the secondary windings H_3K_3 and H_4K_4 of the coupling transformer and the blocking condensers C.136 and C.136-1 (from the vacuum tube anodes to "ground"; and C.130, C.130-1 from the control grid circuits to "ground") serve the same purpose (reducing the parasite oscillations).

The appearance of parasite oscillations in the power stage of the audio section is undesirable, since in such a case the operation of this end of the proceeding stages are unsatisfactory. Unsatisfactory operation is characterized by distortion m of the useful amplified signals. Tha above mentioned distortion must not be heard in the reception of the transmitter in the form of a hum or of hissing. The purpose of introducing lead resistors in the separated circuits of the output stage is to create a great attenuation of parasitis oscillations so that they are eliminated. The purpose of the small capacity condensors which block the individual circuits of this stage is to create a short-circuit to ground for the parasitic oscillations.

Negative voltage feedback is used for the stabilization of the input voltage and for reducing the coefficient of nonlinear distortion.

The negative feedback is accomplished by the insertion of a feedback voltage divider connected between the anode of one tube and the ground (chassis) into each branch of the stage. The resistors R.131, R.131-1, R.131-2, R.131-3, R.187-1 and R.148 form the feedback voltage divider of the "right vacuum tube" and the

SECRET
NO FOREIGN DISSEM
Declassified in Part - Sanitized Copy Approved for Release 2013/10/18 : CIA-RDP80T00246A071100330001-5

Declassified in Part - Sanitized Copy Approved for Release 2013/10/18 : CIA-RDP80T00246A071100330001-5
NO FOREIGN DISSEM

resistors R.131-7, R.131-6, R.131-4, R.107 and R.148 (the last resister is common for the voltage dividers in both branches) from the feedback voltage divider of the "left tube". The necessary negative feedback voltage values are obtained across the resistors R.107-1 and R.107., corresponding to the right and left branches of the modulation stage, and these voltages are applied to the grid-to-cathode circuits across the secondary winding between the coupling transformer T.102. After combining the negative feedback voltage and signal voltage coming to the circuits from the proceeding stage the control voltage on the control grids is reduced and thus the amplification of the modulating stage is reduced too. The condensers C.124 and R.124-1 are blocking condenser which pass the audio frequency feedback signal, but will block the high voltage direct current anode supply.

The resistors R.131, R.151-1, R.151-2, R.151-3, R.151-4 and R.151-5 connected in parallel to the modulating transformer winding "1 3" are load resistors. They are used for reducing the voltage amplitude across the autotransformer during transition from transmission to reception during duplex communication.

The transmitter is amplitude modulated and uses anode modulation. Therefore the anode supply voltage and uses anode modulating autotransformer T.103. The respective autotransformer winding sections are connected in the anode voltage circuits of the modulating stages in series with the anode voltage source. The signal audio frequency voltage built up across the transformer changes the anode voltage of the modulated stages in step with the signal frequency. This creates the modulation of the high frequencies.

Both the fifth and sixth stages are modulated in order to obtaine a linear modulating characteristic. On account of the

Declassified in Part - Sanitized Copy Approved for Release 2013/10/18 : CIA-RDP80T00246A071100330001-5

Declassified in Part - Sanitized Copy Approved for Release 2013/10/18 : CIA-RDP80T00246A071100330001-5
NO FOREIGN DISSEM

50X1-HUM

need of 100% modulation the anode voltages of the vacuum tubes of these stages are lower in comparisan to the anode voltage supplied to the modulator vacuum tubes. The voltages is lowered by dropping resistors connected in the anode circuits of the vacuum tubes of the modulated stages. In order that no modulating voltage drops arise on these resistors, the resistors are blocked by large capacities.

The fifth stage is modulated in such a way that its co-efficient of modulation is in the range of 30 to 80%. Therefore the value of the modulating voltage supplied to the tube anodes of this stage is smaller than the value of the modulating voltage of the vacuum tube anodes of the sixth stage.

The alternating current and the direct current components continue from the T.103 autotransformer lead "6" over the high voltage contact 123 on terminal board ..111, across the resistors R.142 and R.143 blocked by the condenser C.129, over high voltage contacts 123 (106), across the blocking filter L.103, C.114 and finally over inductance L.111 of the oscillating circuit to the anodes of the fifth stage tubes (see the transmitter schematic diagram).

The direct current and the alternating current components of the anode voltage are supplied to the anodes of the sixth stage vacuum tubes from the T.103 autotransformer tap "4" over the high voltage contacts 124 the ..111 terminal board, across the parallel dropping resistors R.143-1, R.143-2, R.143-3 blocked by the condensers C.129-1 and C.126-2, over the high voltage contact 124 (..106) across the blocking filter L.103-1, C.114-1 and finally over the inductance L.113 of the oscillating circuit.

The condensers C.126 and C.126-1 connected between the autotransformer tape "3" and "4" and "ground" (the chassis) are

SECRET
NO FOREIGN DISSEM
Declassified in Part - Sanitized Copy Approved for Release 2013/10/18 : CIA-RDP80T00246A071100330001-5

Declassified in Part - Sanitized Copy Approved for Release 2013/10/18 : CIA-RDP80T00246A071100330001-5
NO FOREIGN DISSEM

blocking condensers and they bypass the high frequency voltages to "ground".

The modulation level is measured by means of the modulation monitor described in section 4 of this paragraph.

The automatic modulation level control. The preamplifier automatic volume control system, or in other words the automatic modulation level control of the transmitter (AP..M) works in conjunction with a twin-diode 6H8C (..105-2) (see fig.2-18).

The importance of the automatic modulation level control lies in the fact that it maintains the modulation of the transmitter at a level of not less than 80%, with a change in the value of the input modulating voltage from 0,25 to 1 volt. The indtroduction of such a system into the transmitter circuit enables primarily understandability of the speech during radio reception. All of this leads to the prolongation of the communication distance.

The principle of the function of the automatic modulation level control is analogical with the delayed automatic volume control in radio receivers.

The system parameters are chosen in such a way that an increase in the input modulating voltage (from 0,25 to 1 V) increases the modulation level of the transmitter approximately from 80 to 100 %.

The automatic modulation level control is actually a full wave diode detector using a twin-triode 6H8C (.105-2) with the grids connected directly to their anodes. The anodes of these effective diodes are connected to the H_5K_5 winding of the T.102 coupling transformer. The detector load is the resistors R.108-5 and R.150-2; the condenser C.123-3 blocks the load.

The diode cathodes are connected to the sliding contact of the variable resistor R.411. This resistor together with the resistor R.126 from a voltage divider connected in the 300 volt.

Declassified in Part - Sanitized Copy Approved for Release 2013/10/18 : CIA-RDP80T00246A071100330001-5

Declassified in Part - Sanitized Copy Approved for Release 2013/10/18 : CIA-RDP80T00246A071100330001-5
NO FOREIGN DISSEM

voltage divider of the circuits. The necessary delay voltage value is obtained from the resistor R.411, i.e. a negative potential with respect to the cathode applied to the anode. The resistors R.108-11 and R.130-2 represent a voltage divider both creating an initial grid bias of the first pre-amplifier stage vacuum tube ..105-1 and the initial delay voltage of the anodes of the vacuum tube /..105-2 diodes.

The automatic modulation level control functions in the follow - ing manner: current flows across the anode of the detector only when the audio signal amplitude on each half of the T.102 coupling transformer winding H_5K_5 is greater than the delay voltages The direct current component across the anodes establishes a rectified voltage across the lead resistors R.108-6 and R.130-2. This voltage is connected to the grid-to-cathode circuit of the first pre-amplifier stage vacuum tube so that the negative bias reaches the grids.

Therefore with the appearance of the voltage across the detector lead, the negative bias of the first amplifier stage vacuum tube increases and the amplification decreases.

An encrease of the input audio signal reduces the amplification of the first stage amplifier. The modulator output voltage therefore does not change.

The automatic modulation level control system thus establishes a condition under which the automatic transmitter modulation level control takes place within the range mentioned above.

Blocking of the pre-amplifier and modulator. By releasing the push button in the microphone handle during the transition from transmission to reception, overvoltages might be created on the autotransformer as a result of the transient currents during the disconnection if special means for their prevention were not used. Some of these means were mentioned above (shunting the second

SECRET
NO FOREIGN DISSEM
Declassified in Part - Sanitized Copy Approved for Release 2013/10/18 : CIA-RDP80T00246A071100330001-5

Declassified in Part - Sanitized Copy Approved for Release 2013/10/18 : CIA-RDP80T00246A071100330001-5
NO FOREIGN DISSEM

winding of the T.101 transformer and the insertion of resistance between the anodes of the modulation. Besides these, the most acceptable practical means for prevention of overvoltages is the blocking of the vacuum tubes by a large negative bias (ground 300 V) During transition to reception the contacts 1, 2 and 3, 4 of the relay -)102 (the reception-transition relay) open and disconnect the chassis from the voltage divider resistor R.150-2, from the common grid leak R.108-6 and R.108-7, as well as from the resistor R.148 of the modulator bias voltage divider (see fig.2-18). As a result of this the vacuum tubes of the pre-amplifier and modulator are blocked by the negative voltage of - 300 V.

3. The vacuum tube voltmeter.

The vacuum tube voltmeter is a measuring instrument used for measuring the audio signal voltage (for control purposes) which is connected to the first stage of the audio pre-amplifier section of the transmitter.

The voltmeter range is from 0 to 1.5 volts.

The vacuum tube voltmeter consists of two stages (see the schematic diagram fig.2-19). The first stage consists of two diode detectors using a single type 6 X 6C twin-diode (.107-1). The second stage is a bridge connected direct current amplifier using a single type 6H8C twin-triodd (.105-3). A milliamper-meter M.401 (full scale deflection equals 1 ma) is connected in the cathode circuit of the second stage vacuum tube. The scale of the meter is marked in volts.

The measured voltage is applied to the 6X6C vacuum tube (.107- anodes across the condensers C.128-1 and C.118, C.127 and C.127-1, so that both half-waves are rectified. The resistors R.134 and R.134-1 fulfill the role of detector anode load. The rectified voltage

Declassified in Part - Sanitized Copy Approved for Release 2013/10/18 : CIA-RDP80T00246A071100330001-5

Declassified in Part - Sanitized Copy Approved for Release 2013/10/18 : CIA-RDP80T00246A071100330001-5
NO FOREIGN DISSEM

across these resistors is led over the filter components R.138, C.128-3 and R.135-1, R.128-4 to the grid-to-cathode circuits of the 6H8C vacuum tube of the bridge connected direct current amplifier and the potential of one grid with respect to the cathode will be negative, while that of the other one will be positive.

The bridge connected direct current amplifier has 6H8C triodes tubes in two of its branches, the resistors R.139, R.136 and R.138-1 in its third branch and the resistors R.408, R.408-1 and R.412 in its fourth branch. The milliameter ..401 is connected in the diagonal of the bridge.

In order to increase the sensitivity of the vacuum tube voltmeter a positive direct current voltage is applied to the grids of the 6H8C vacuum tube from the resistor R.102-3. The resistor R.102-3 together with the resistors R.140 and R.158 form a voltage divider.

The amplifier must be balanced during the absence of the measured voltage. The needle of the milliammeter will be at zero when the voltage drop across the parallel resistors R.409 and R.408-1. The balancing is accomplished by means of the variable resistor R.412. Sometimes after replacement of the 6H8C vacuum tube it will not be possible to set the meter needle at zero and then it will be necessary to balance the amplifier and to set the meter needle to zero by the R.138 potentiometer.

When the measured signal is connected to the vacuum tube voltmeter input, the balance will be upset and the needle of the milliameter will deflect by an angle proportionate to the measured voltage. This takes place because, as was mentioned already before the voltage rectified by the detector sets on one control grid of the triode vacuum tube .103-3 with a positive potential, whereas on the other grid it acts with a negative potential.

The resistor R.137 x limits the value of the current flowing,

SECRET
NO FOREIGN DISSEM
Declassified in Part - Sanitized Copy Approved for Release 2013/10/18 : CIA-RDP80T00246A071100330001-5

Declassified in Part - Sanitized Copy Approved for Release 2013/10/18 : CIA-RDP80T00246A071100330001-5
NO FOREIGN DISSEM

50X1-HUM

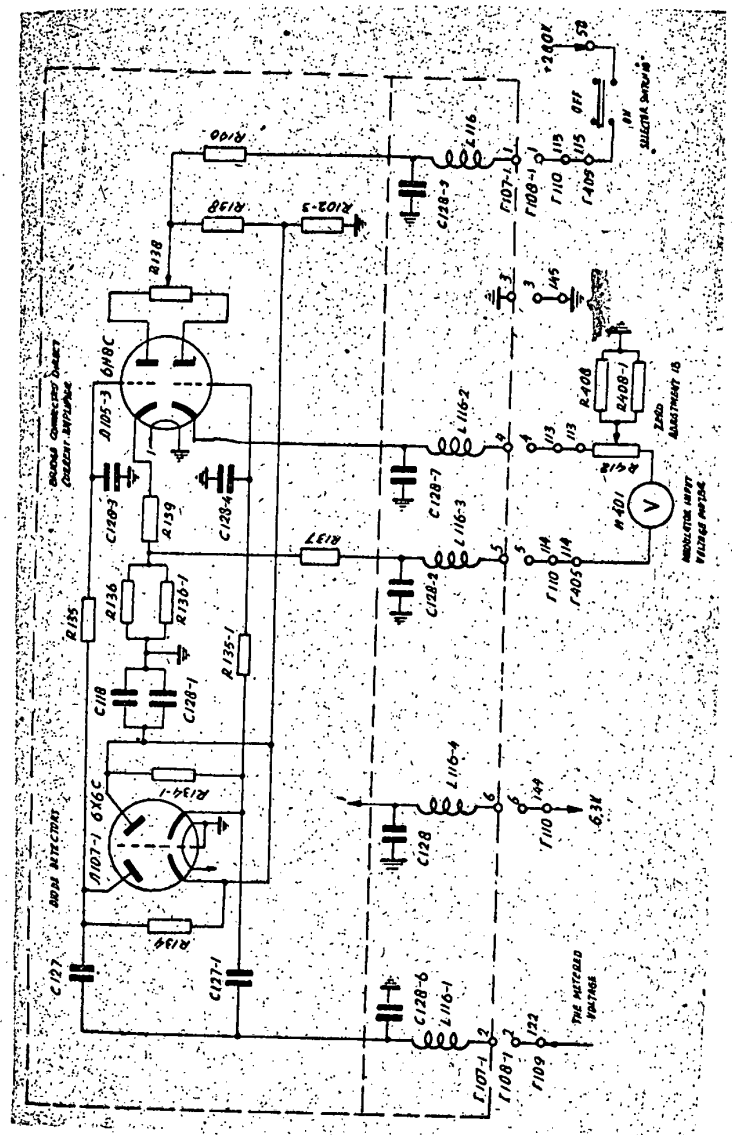

Fig. 2-19. Schematic diagram of the vacuum tube voltmeter.

SECRET
NO FOREIGN DISSEM
Declassified in Part - Sanitized Copy Approved for Release 2013/10/18 : CIA-RDP80T00246A071100330001-5

Declassified in Part - Sanitized Copy Approved for Release 2013/10/18 : CIA-RDP80T00246A071100330001-5
NO FOREIGN DISSEM

through the voltmeter.

The high frequency chokes L.116-1, L.116-2, L.116-3 and L.116-4 together with the condensors C.128, C.128-2, C.128-5, C.128-6 and C.128-7 from a low-pass filter which blocks the high frequency current in the vacuum tube voltmeter.

The following voltages are necessary for supplying the vacuum tube voltmeter: 280 V.for the anodes of the vacuum tube 6H8C and 6.3 V.for the filament voltage of both vacuum tubes. The stabilized potential of 280 V for the anodes of the vacuum tube 103-3 in supplied from the contact 30 of the terminal board 405 across the switch 403-2, over the contacts 115 of the terminal boards 405 and 110, over the contacts 1 of the terminal boards 108-1 and 107-1, across the choke L.116 and the resistors R.140 and R.138.

The switch 408-2 is used for turning the voltmeter on.

4. Modulation monitor.

The modulation monitor is a measuring instrument for measuring (controlling) the modulation level of the frequencies generated by the transmitter.

It is known that the amplitude modulation represents a variation of the high frequency amplitude at an audio (low) frequency rate. Figure 2-20 shows an example of the amplitude modulation.

A measure of a valuation of thea influence of the modulating audio frequency on the high frequencies in the so called co-efficient of modulation.

The co-efficient of modulation (m) is the ratio of the amplitude increases of the high frequencies (Im) when modulated to the amplitude of these high frequencies without modulation and (Im_0), that is :

$$m = \frac{Im}{Im_0} = \frac{Imax - Imin}{2\ Im_0}$$

Where Imax and Imin are the largest and smallest high frequency

Declassified in Part - Sanitized Copy Approved for Release 2013/10/18 : CIA-RDP80T00246A071100330001-5

Declassified in Part - Sanitized Copy Approved for Release 2013/10/18 : CIA-RDP80T00246A071100330001-5
NO FOREIGN DISSEM

amplitudes (in fig. 2-20 Imax ..A/2 and Imin = /2).

The coefficient of modulation may also be expressed as a percentage:

$$m = \frac{IM.}{Im_0} 100\% = \frac{Imax - Imin}{2xm_0} = 100\%$$

The principle of the modulation monitor operation is that it measures the unmodulated high frequency amplitude (Im_0) and the increase in amplitude of these frequencies when modulated (..Im) The scale of the modulation monitor is graduated directly in the percent coefficient of modulation (M%).

The range of the modulation monitor meter is from zero to 100%. The scale is graduated up to 110 for over-modulation.

The accuracy of the scale calibration of the measuring instrument is ±15% in the range from 50 to 10%.

The modulation monitor is designed for direct modulation coefficient reading and consists of a diode detector (main one) and a full wave cuprox fectifier (see fig. 2-21).

The main diode detector (see the schematic diagram fig. 2-21) uses the right diode of the type 6XEC twin-diode vacuum tube (..107) The high frequency potential of the coupling loop L.114 which is inductivdly coupled with the output stage of the transmitter high frequency section is brought to the right anode of the vacuum tube ..107 by the coupling feeder K.104, across the low-pass input filter (consisting of the induction coils L.118, L.119, L.120 and the condensors C.129-1 and C.106-4), blocking condenser C.132 and parallel dropping resistors R.157 and R.157-1. The semi-adjustable condenser C.116-4 connected in the feeder K.104 input is used for balancing the modulation monitor with the transm tter output. The resistors R. 147, R.147-1 and R.147-2 (which are all alike) are used for creating a travelling voltage wave in the feeder K.104.

The detector load consists of the adjustable resistor R.122,

SECRET
NO FOREIGN DISSEM
Declassified in Part - Sanitized Copy Approved for Release 2013/10/18 : CIA-RDP80T00246A071100330001-5

Declassified in Part - Sanitized Copy Approved for Release 2013/10/18 : CIA-RDP80T00246A071100330001-5
NO FOREIGN DISSEM

50X1-HUM

the resistor R.124x and the milliameter 106 with an adjustable composite shunt consisting of parallel alike resistors R.139 x and R.164 in series with the adjustable resitor R.125. The choke L.117 and the condenser C.117 represent a type T/2 filter for low frequencies and protect the detector load against high frequency potentials.

After detection of the modulated high frequency oscillations, a direct current component and audio oscillations (of the modulating frequency) appear in the load circuit.

The audio frequency voltage from the load resistor section of the diode detector is led across the blocking condenser C.122 to a cuprox rectifier.

The full wave cuprox ~~xxxxxxx(101)~~ rectifier uses the bridge connected type HK-20-1 cuprox column (101).

The rectifier load is the ..107 milliamter, which is bypassed by condenser C.102-29. After rectification direct current flows through this meter.

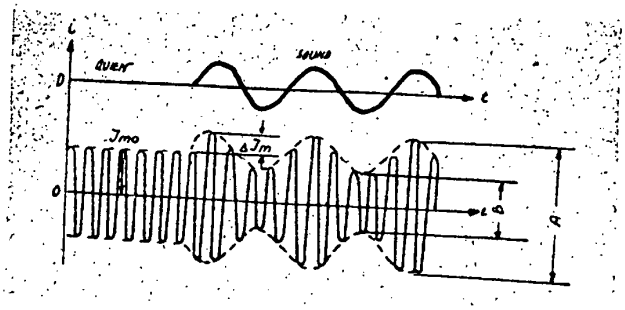

Fig. 2-20. The principle of radiotelephony amplitude modulation.

When the modulated carrier wave is applied to the input of the modulation monitor, a current containing the direct current component proportionate to the modulated carrier wave and an alternating current component equal to the modulated signal will flow through the main detector load. The ..106 milliameter needle will deflect by an angle proportionale to the modulated carrier wave.

SECRET
NO FOREIGN DISSEM
Declassified in Part - Sanitized Copy Approved for Release 2013/10/18 : CIA-RDP80T00246A071100330001-5

Declassified in Part - Sanitized Copy Approved for Release 2013/10/18 : CIA-RDP80T00246A071100330001-5
NO FOREIGN DISSEM

50X1-HUM

The x cuprox rectifier rectifies the audio frequency (modulating voltage which is generated in the main diode load. The amount by which the value of this voltage changes by that amount the amplitude of the high frequnecy oscillation changes during the modulation in the load circuit of the rectifier (through the meter ..107) and a current ~~ofxthexrectifierxthroughxthe~~ will flow which <u>will be proportionate</u> <u>to the gain in the amplitude of the carrier wave during modulation</u>.

When the value of the current in the detector load circuit will be constant and will simultaneously be proportionate to the amplitude of the oscillations without modulation, then the angle of deflection of the meter (..107) needle <u>will be proportionate to the coefficient of modulation</u>.

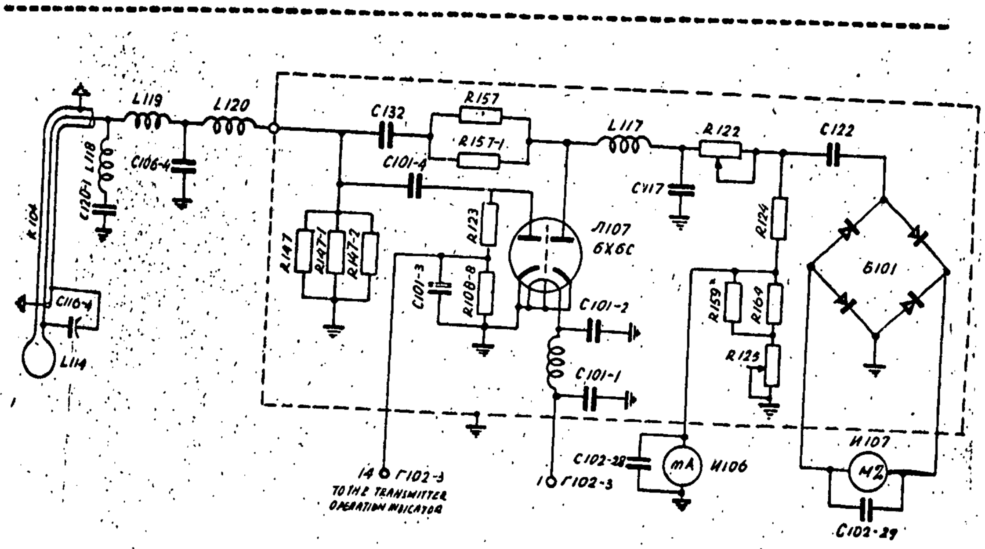

<u>Fig. 2-21. Schematic diagram of the modulation monitor</u>.

The milliamter ..106 scale has two colored lines (a red and a green one) indicating the curent magnitude (proportionate to the carrier wave without modulation) at which the milliameter ..107 scale has been <u>calibrated</u> in coefficient m of modulation units. (M%) The <u>red line</u> indicates the current magnitude at which the meter .107 has been calibrated for the <u>full</u> transmitter power (100%) operation and the <u>green line</u> on the scale is for <u>reduced</u> ~~fax~~ transmitter power operation (10 to 40%).

SECRET
NO FOREIGN DISSEM

Declassified in Part - Sanitized Copy Approved for Release 2013/10/18 : CIA-RDP80T00246A071100330001-5

Declassified in Part - Sanitized Copy Approved for Release 2013/10/18 : CIA-RDP80T00246A071100330001-5
NO FOREIGN DISSEM

50X1-HUM

The scale graduations of the meter (..107) read the coefficient of modulation from 0 to 100% (the part of the scale from 100 tp 110% corresponds to overmodulation). Each scale graduation corresponds to 5%, and the scale graduations equal to 0, 20, 40, 60, 80 and 100 are numbered. On the lower part of the scale is a green line with the numder "100". This line corresponds to the 100% coefficient of modulation when the transmitter is operating at reduced power (from 10 to 40%).

Before each measurement the milliameter ..106 needle must be adjusted to the red (or green) line of its scale by means of the adjustable resistor R.122. ~~Above~~ Above the knob of this resistor is the following inscription: "_____"("Modulation monitor coupling adjustmant").

The ..106 milliameter is also used for the adjustment of the sixth transmitter stage. In the panel above this milliameter is the following inscription "_____"("adjustment of the sixth stage").

On the panel above the 107 milliameter is the inscription "_____"("modulation level").

The left hand diode of tube ~~6~~ 6X6C (.107) (see the circuit diagram fig. 2-21) is used as an auxilliary diode detector. This detector, just as the modulation monitor detector, is used for separating the direct current component from the high frequency oscillation 'unmodulated or modulated) and in case of modulated high frequency oscillations for separating the audio (modulating) frequencies.

The high frequency potential, after passing the low pass filter and the blocking condenser C.101-4, is applied to the anode of the auxilliary detector. The detector load consists of the series connected resistors R.123~~x~~ and R.108-8. From the resistor R.106-6 the voltage drop of the direct current compcnent (in case of

SECRET
NO FOREIGN DISSEM
Declassified in Part - Sanitized Copy Approved for Release 2013/10/18 : CIA-RDP80T00246A071100330001-5

Declassified in Part - Sanitized Copy Approved for Release 2013/10/18 : CIA-RDP80T00246A071100330001-5
NO FOREIGN DISSEM

of modulated high frequency oscillations) and the audio frequency current are led over the contacts 14 of terminal boards (.102-3 and .103;3, over the contacts 1 of terminal boards 108 and 107 to the grid of one of the triodes of the vacuum tube 6H8C (.105) of the transmitter monitor.

The inductance coil L.~~105~~ 104 and the condensers C.101-1 and C.101-2 from a low frequency filter, which protects the filament circuits against the maleffects of the high frequency currents.

The necessary filament voltage supply of the 6x6C vacuum tube s is 6.3 volts.

5. The transmitter monitor.

The transm'tter monitor is used for signaling the operating condition of the transmitter and for checking the telephony operation of the remote control unit B..Y. The schematic diagram is given by fig. 2-22/

One triode (as a rule the first triode) of a twin-triode vacuum tube 6H8C (.105), the resistor R.131-8 and the resistor R.120 form a 300 V. voltage divider. The voltage drop across this triode depends on the value of the bias of its grid.

The other (the second) triode of the vacuum tube ..103 works as an audio amplifier. The anode load of this triode consists of resistors R.120 and R.126-1 and of the relay -)103 coil. From the anode of the first triode a positive potential is applied to the grid of the second triode. The cathode of this triode has a greater positive potential than that of (the positive potential) the grid. This way the grid is negative with respect to the cathode and the other triode is almost blocked, i.e. when there is no high frequency potential in its anode circuit, then the current is less than 2 ma. and cannot operate the relay.

SECRET
NO FOREIGN DISSEM
Declassified in Part - Sanitized Copy Approved for Release 2013/10/18 : CIA-RDP80T00246A071100330001-5

Declassified in Part - Sanitized Copy Approved for Release 2013/10/18 : CIA-RDP80T00246A071100330001-5
NO FOREIGN DISSEM

50X1-HUM

When the transmitter is operating and the high frequency oscillations are applied to the modulation monitor (see fig. 2-21 and the transmitter circuit diagram) a voltage drop of the direct current component (in case of modulated high frequency iscillations) and of the audio frequency currents (modulating frequency is set up across the diode detector load.

From the anode load resistor of the modulation monitor auxilliary diode detector the direct current voltage component is applied to the grid of the first triode of transmitter monitor vacuum tube ..105 as a negative bias and the audio frequency component is applied to the grid of the diode section (second triode) over the blocking condenser C.133.

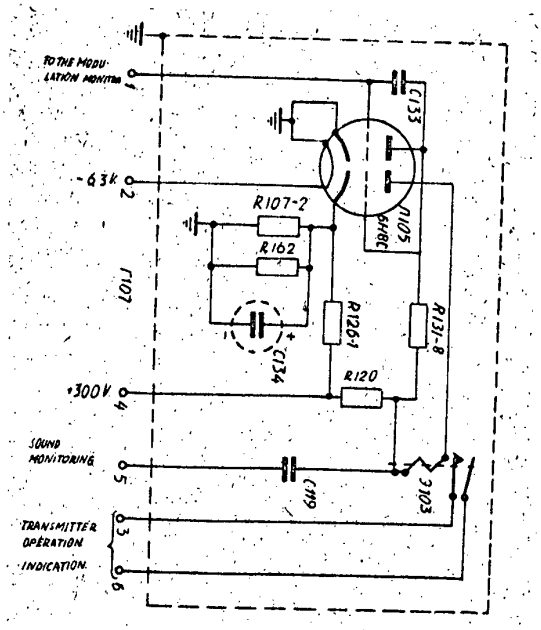

Fig. 2-22. Schematic diagram of the transmitter operation indicator.

When the negative bias is applied to the grid of the first triode the voltage drop of this ~~tube~~ triode increases and thereby the positive potential on the grid of the second triode also increases and thus the direct current component of the anode current increases too. (The direct current component increases to 7.6 ma).

SECRET
NO FOREIGN DISSEM
Declassified in Part - Sanitized Copy Approved for Release 2013/10/18 : CIA-RDP80T00246A071100330001-5

Declassified in Part - Sanitized Copy Approved for Release 2013/10/18 : CIA-RDP80T00246A071100330001-5
NO FOREIGN DISSEM

50X1-HUM

As this current flows through the -)103 relay coil, the relay operated and its contacts close the 180 V control line circuit. The relay -)602-1 in the remote control unit B..Y is thus energized and lights the pilot lamp ..602 by connecting it to the 6.3 V. circuit (see fig. 2-23).

This way the transmitter operating/ audio signalization is realized on the remote control unit (B..Y)

After amplification, the audio frequency signal passes across the blocking condenser C.119, over contacts 4 5 of terminal boards .107 and .108, over contacts 100 of terminal boards .105 and .405 and through the jack .401-2 ("K") (in the central control unit) to the main phones (see fig. 2-25).

In this way the transmitter telephony operation is monitored.

2-3. Transmitter design features and assembly.

The YKB-250 transmitter (see fig. 2-24) consists of two sections: the high frequency or first section and the audio frequency or second section.

These sections are located in a special metal transmitter cabinet-rack and in case of necessity they may be removed from it.

Besides the already mentioned for heating the filaments of the transmitter vacuum tubes, or in short: filament transformer block (this block as well as the first and second sections may be removed from the rack), further, the rack contains a control line rectifier for supplying some of the control circuit relays; an air-cooling system for the ...-7.. vacuum tubes of the second and output power amplifiers (the fifth and sixth stages); and an electro-mechanical timer "_____" ("time delay").

SECRET
NO FOREIGN DISSEM
Declassified in Part - Sanitized Copy Approved for Release 2013/10/18 : CIA-RDP80T00246A071100330001-5

Declassified in Part - Sanitized Copy Approved for Release 2013/10/18 : CIA-RDP80T00246A071100330001-5
NO FOREIGN DISSEM

50X1-HUM

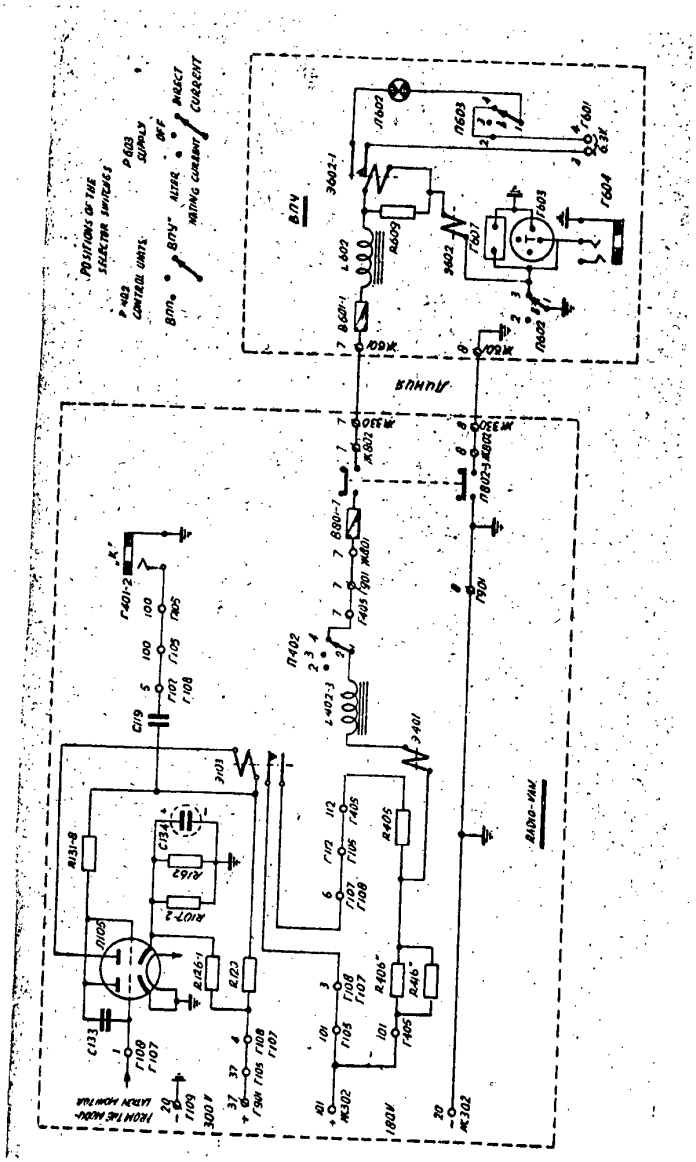

Fig. 2-23. Schematic diagram of the transmitter operating readiness signaling and sound monitoring.

SECRET
NO FOREIGN DISSEM
Declassified in Part - Sanitized Copy Approved for Release 2013/10/18 : CIA-RDP80T00246A071100330001-5

Declassified in Part - Sanitized Copy Approved for Release 2013/10/18 : CIA-RDP80T00246A071100330001-5

50X1-HUM

1. The transmitter relay rack.

The transmitter relay rack (fig. 2-25) dimension are: 1720X 630 X 760 mm. Its frame is made of welded steel angles. The calls of the rack are fastened by screws.

The ceiling has areetangular cut-out (covered by a screen mesh) for exhausting the air warmed up when passing the radiating fine of the ...ф 78 vacuum tube anodes.

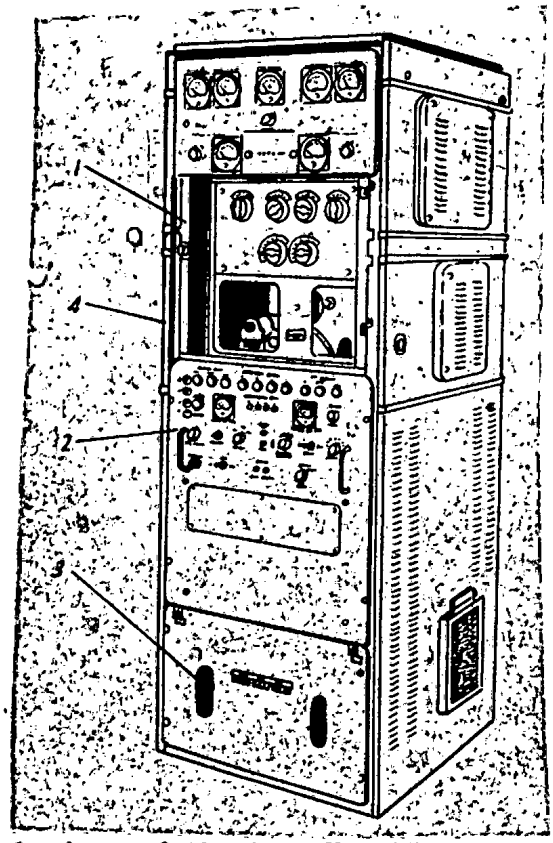

Fig. 2-24. General vieuw of the type YKB-250 transmitter (with front door removed):

1). high frequency (first) section; 2), audio frequency (second) section; 3) transmitter vacuum tube filament transformer block; 4) relay rack.

The left side wall has a cut-out for a 57 contact terminal board fastened to the rack and the right side wall has a cut-out for the ... - 7. tube air cooling intake. The cut-out in the left side wall together with the terminal are covered by a screen cover and the cut-out in the right side wall (see fig. 2-24) is covered

Fig. 2-

Declassified in Part - Sanitized Copy Approved for Release 2013/10/18 : CIA-RDP80T00246A071100330001-5

Declassified in Part - Sanitized Copy Approved for Release 2013/10/18 : CIA-RDP80T00246A071100330001-5

50X1-HUM

by an air oil filter placed in guides attached to this wall.

Besides this the side walls have windows (two in each wall) for across to the fifth and sixth stage vacuum tubes, as well as circular openings for the high frequency feeder coming from the reception-transmission relay to the receiver (through the opening in the left wall) and to the antenna (through the opening in the right wall).

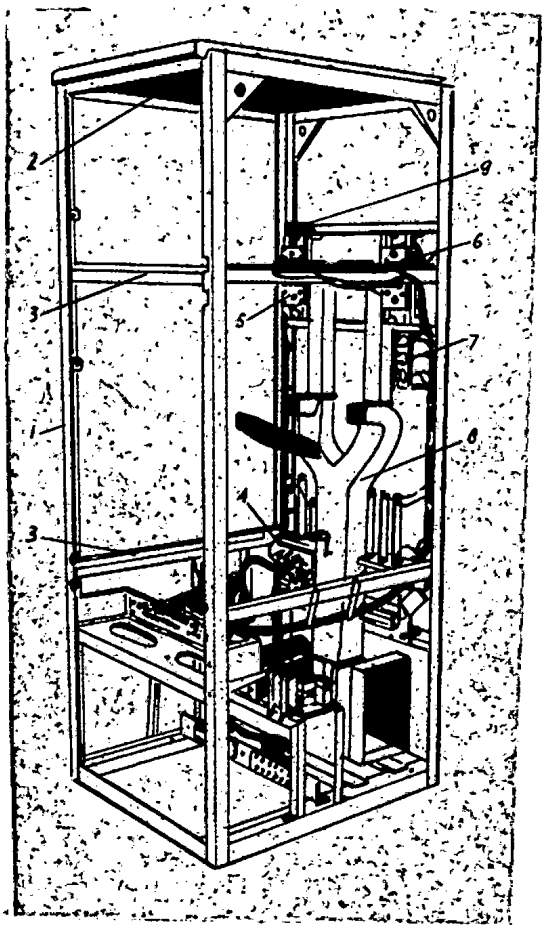

Fig. 2-25. Transmitter rack (with side and rear doors removed):

1-frame, 2-ceiling, with rectangular cut-out covered by screening; 3-guide walls; (rails); 4-connecting terminal board for the second section (.110); 5-connecting terminal board for the first section (.104); 6-connecting terminal board for the first section (.105); 7-high voltage contacts (in through bushings) (.106); 8-air duct; 9-dropping resistors in the filament circuits of the fifth and sixth stage vacuum tubes.

The window for access to the vacuum tubes are covered by special doors.

Declassified in Part - Sanitized Copy Approved for Release 2013/10/18 : CIA-RDP80T00246A071100330001-5

Declassified in Part - Sanitized Copy Approved for Release 2013/10/18 : CIA-RDP80T00246A071100330001-5

50X1-HUM

The rack has guide angles along which the chassis of the first and second section and the filament transformer block slide when placed in or removed from the rack.

The upper part of the relay rack contains the high frequency sections (the first section).

The center part of the relay rack contains the audio frequency section (the second section).

The lower part of the relay rack contains the filament transformer block.

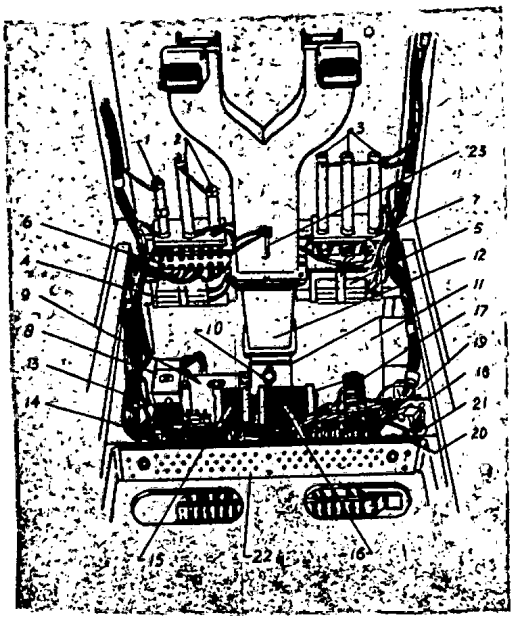

Fig. 2-26. View of the lower transmitter rack section:

10-dropping resistors in the +600 V circuit (R.141 and R.141-1); 2-dropping resistors in the fifth stage vacuum tube anode circuits (R.142 and R.143); 3-dropping resistors in the sixth stage vacuum tube anode circuits (R.143-1, R.143;2 and R.143-3); 4-fifth stage vacuum tube anode circuit blocking condenser (C.129); 5-sixth stage vacuum tube anode circuit blocking condenser (C.129-1); 6-connecting terminal board of the second section (.110); 7-high frequency contacts (in through bushings)(111); 8-electromechanical "_____" (Time delay) automat (901); 9-ventilator electric motor (M.302); 10-main ventilator; 11-intake air-duct; 12-air-duct; 13-connecting terminal board of the control circuit rectifier; 14-transmitter vacuum tube filament transformer (T.310);

NO FOREIGN DISSEM

Declassified in Part - Sanitized Copy Approved for Release 2013/10/18 : CIA-RDP80T00246A071100330001-5

Declassified in Part - Sanitized Copy Approved for Release 2013/10/18 : CIA-RDP80T00246A071100330001-5
NO FOREIGN DISSEM

50X1-HUM

15-stabilizing choke (L.307(of the control circuit rectifier; 16-control circuit rectifier transformer (T.311); 17-rectifier (B309 selenium columns; 18-load resistor R.315); 19-filter condenser (C.310); 20-filter choke (L.305); 21-filter condenser (C.308); 22-connecting terminal board (.405) of the central control unit for controlling the second section; 23-inter;locking contacts in the ..-7.. vacuum tube air-cooling system.

On the rear wall of the first and second sections as well as on the filament transformer block are fastened multi-contact terminal board with knife contacts. When the sections or the block are slid into the relay rack the knife contacts of these terminal boards ~~xxx xxxxxxxxxxxxxxxxxx~~ enter the appropriate contacts of the terminal boards fastened to the relay rack.

The air-cooling system for cooling of the fifth and sixth stage vacuum tubes is located in the bottom part of the relay rack (fig. 2-26) and along its rear wall. Besides this, the lower part of the relay rack also contains the electromechanical time-delay automat and the control line rectifier.

Special brackets which carry the high voltage contacts (through bushings) and the panels with the dropping resistors and the blocking condensers (in the 600 V and 1300 V circuits) are fastened to the relay rack.

A wiring harness fastened by clips to the relay rack is used for connections between terminal boards in the relay rack circuits.

2. The high frequency (first) section of the transmitter.

The high frequency section of the transmitter (see figures 2-27 and 2-26) consists of the following nine blocks:

1) The block of the first four stages.
2) The power amplifier block (the fifth stage block).
3) The output power amplifier block (the sixth stage block).
4) The symmetrization unit block.

SECRET
NO FOREIGN DISSEM
Declassified in Part - Sanitized Copy Approved for Release 2013/10/18 : CIA-RDP80T00246A071100330001-5

Declassified in Part - Sanitized Copy Approved for Release 2013/10/18 : CIA-RDP80T00246A071100330001-5

5) The receive-transmit relay block.

6) The meter and modulation monitor block.

7) The transmitter monitor block.

8) The automatic communication frequency (channel) selector block (the autotune block).

9) The cable transmission block.

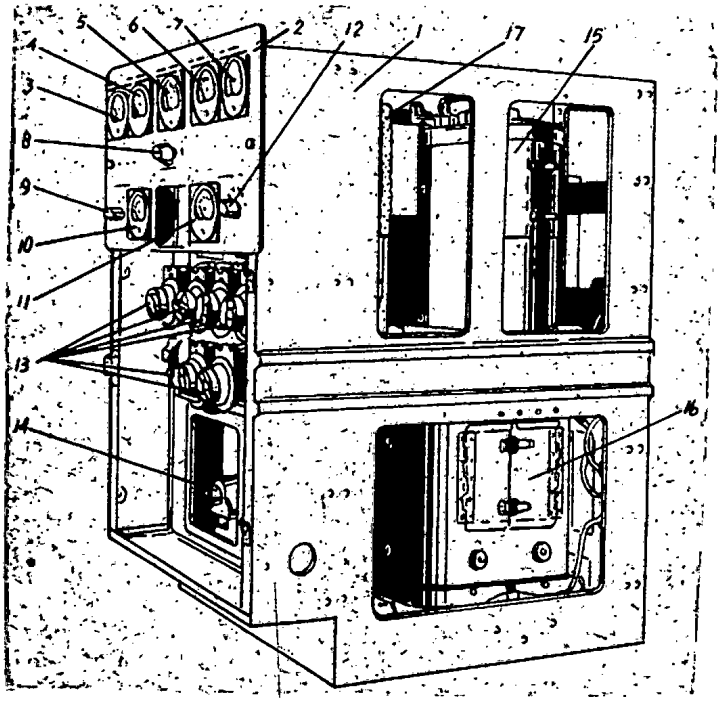

Fig. 2-27. Transmitter high frequency section (front and right view): 1-frame. 2-panel with meters and modulation monitor; 3-meter "105" "_____" (5th.stage tuning");4-meter ..106 "_____" (6th.stage tuning);5-meter .107 "_____" (modulation level);6-meter .104 "_____"(anode voltage) 7-meter .103"_____"(5th.and 6th stage total current); 8-knob of the variable resistor R.122 "_____" (modulation monitor coupling control); 9-knob of the selector switch "101"_____"1st, 2nd, 3rd, and 4th.stage tuning") 10-meter ,.101 "_____"1st, 2nd, 3rd and 4th stage tuning")-11-meter "_____"(5th. and 6th.stage symmetry 12 knob of the selector switch .102 "_____" (5th. and 6th. stage symmetry); 13-automatic modulation channel tuning mechanism; 14- reception-transmission relay; 15-fifth stage block; 16-sixth stage block; 17-high voltage voltmeter-multiplier resistor (R.116).

Declassified in Part - Sanitized Copy Approved for Release 2013/10/18 : CIA-RDP80T00246A071100330001-5

Declassified in Part - Sanitized Copy Approved for Release 2013/10/18 : CIA-RDP80T00246A071100330001-5

50X1-HUM

The individual blocks are assembled into a single high frequency unit in an aluminium frame built up of separate discast wall (a front one, two side ones and a rear one). The side walls of the frame have (slots) which enter into the upper section relay rack guides when the unit is slid into the rack.

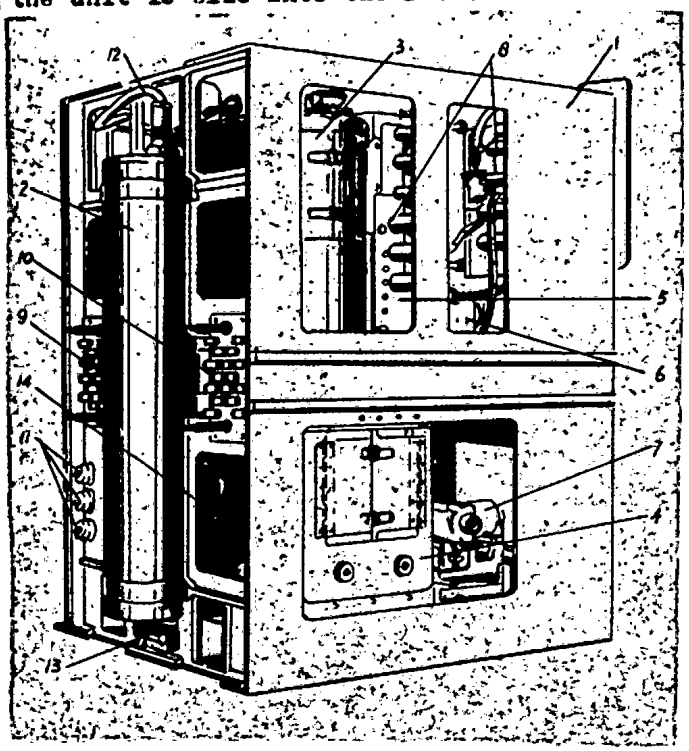

Fig. 2-28. Transmitter high frequency section (rear and left view):

1-frame; 2-symmetrization unit; 3-fifth stage block ; 4-sixth stage block; 5-block of the first four stages; 6-the cable transmission blocks; 7-reception-transmission relay block; 8-resistors of the bias voltage divider for the transmitter vacuum tubes; 9-21-contact connecting terminal board (.105); 10-17-contact connecting terminal board (.104) 11-three high voltage contacts (in through bushings) (.106); 12- high frequency cable (X102) from the symmetrization unit to the reception-transmission relay; 13-coupling of the modulation monitor coupling loop to the transmitter output; 14-high frequency cable (X104) from the coupling loop to the modulation monitor.

The frame carries on its outside on the front wall in the upper part - a panel with meters and the modulation monitor;

- in the center of the front wall - the autotune block;

- in the x center of the rear wall - the symmetrization unit block.

Declassified in Part - Sanitized Copy Approved for Release 2013/10/18 : CIA-RDP80T00246A071100330001-5

Declassified in Part - Sanitized Copy Approved for Release 2013/10/18 : CIA-RDP80T00246A071100330001-5

50X1-HUM

~~Thexindividual~~ Inside the frame are located:

- in the middle of the front part ontop - the cable transmission block and the block of the first four stages;

- in the front part at the bottom, at left - the receive-transmit relay block; at the right - the transmitter monitor block;

- in the rear part on top - the fifth stage block;

- in the rear part at the bottom - the sixth stage block.

Besides the blocks, the frame of the high frequency section carries the following components:

- on the front wall of the frame to the left of the autotune block - five sets of double jacks for checking the transmitter supply voltages;

- on the front wall at the bottom - a toggle switch for connecting and disconnecting the high voltage;

- inside the frame in the right top corner of the front wall the multiplier resistor for the 3000 volt voltmeter;

- inside the frame on the left side wall, at the top - two panels with bias voltage divider resistors for the transmitter vacuum tubes; at the bottom - two blocking condensers;

- inside the frame at the bottom (under the symmetrization unit block) - the coupling loop of the modulation monitor;

- outside the frame on the rear wall - two multicontact terminal boards and three high voltage through bushings (in through insulators).

Each multicontact terminal board has two guide pins, which, during assembly of the high frequency section into the relay rack, are inserted into guide openings in the corresponding multicontact terminal boards in the relay rack.

Aluminium shielding is screwed to the bottom part of the frame.

Declassified in Part - Sanitized Copy Approved for Release 2013/10/18 : CIA-RDP80T00246A071100330001-5

Declassified in Part - Sanitized Copy Approved for Release 2013/10/18 : CIA-RDP80T00246A071100330001-5
NO FOREIGN DISSEM

50X1-HUM

The individual blocks of the high frequency section are connected into an electric unit by a writing harness, individual conductors and high frequency cables.

The high frequency section is fastened to the relay rack by special bolts.

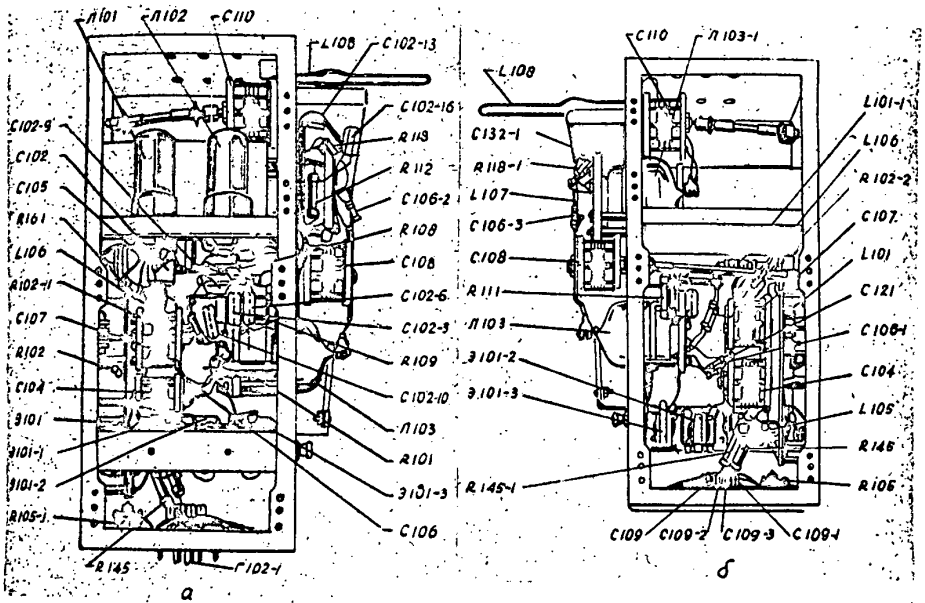

Fig. 2-29. Block of the first four stages (a- right hand side view; 3 - left hand side view)

The block of the first four stages. The first four stages are assembled in an independent block (see fig. 2-29) in an aluminium frame consisting of two sections, an upper and a lower one.

The upper section contains the vacuum tubes of the crystal oscillator, the first frequency tripler and the first power amplifier, i.e. the first, second, and fourth stages and the variable condenser of the first power amplifier circuit.

The lower section contains the vacuum tube of the second frequency tripler (the third stage), variable condensers and induction coils of the crystal oscillator-doubler and of the

SECRET
NO FOREIGN DISSEM
Declassified in Part - Sanitized Copy Approved for Release 2013/10/18 : CIA-RDP80T00246A071100330001-5

Declassified in Part - Sanitized Copy Approved for Release 2013/10/18 : CIA-RDP80T00246A071100330001-5
NO FOREIGN DISSEM

50X1-HUM

tripler circuits, chokes, resistors and condensers, a panel with jacks for the four quartz xrystals, four relays for connecting the crystals, a fifteen-contact terminal board and a number of other smaller components.

On the outer rear wall of the frame these components are located: a variable condenser, the induction loop of the second tripler circuit and a number of other components.

The shafts of the variable condensers are connected through the center wall of the frame to the cable transmission block.

The block is attached to the front wall of the high frequency section by screws.

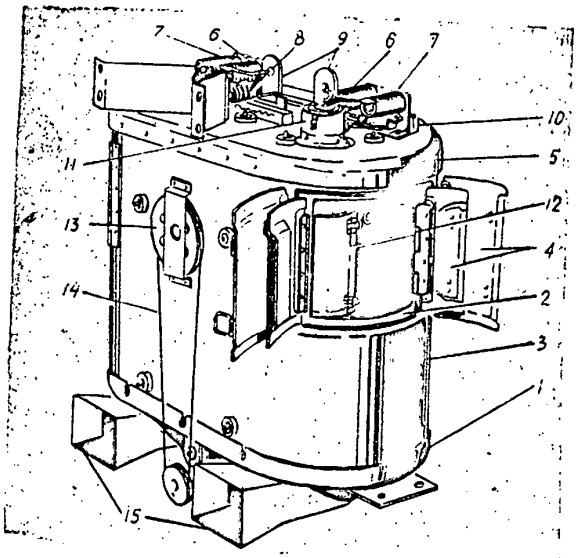

Fig. 2-30. The fifth stage block (rear and side view):

1-foundation; 2-inner (grid) shield; 3-outer (chassis) shield; 4-shield doors; 5-cover of the outer shield; 6-cathode blocking chokes (L.109 and L.109-1); 7-filaments blocking chokes (L.109-6 and L.109-7); 8-first power amplifier vacuum tube anode circuit blocking choke (L.102); 9-first power amplifier coupling condensers (C.112 and C.112-1); 10-blocking condenser (C.102-30); 11-...-T..vacuum tube sockets-; 12-resonant line tube; 13-pulley on the variable condenser shaft; 14-cable 15-air ducts of the ...-78 vacuum tube air cooling system.

The blocks of the fifth and sixth stage. The fifth and sixth stages are mounted in individual blocks (see fig. 2-30 and 2-31).

SECRET
NO FOREIGN DISSEM
Declassified in Part - Sanitized Copy Approved for Release 2013/10/18 : CIA-RDP80T00246A071100330001-5

Declassified in Part - Sanitized Copy Approved for Release 2013/10/18 : CIA-RDP80T00246A071100330001-5
NO FOREIGN DISSEM

50X1-HUM

The block of the fifth (analogically also the sixth) stage is mounted on a foundation (fig.2-32) which carries the oscillating circuit, the coupling loop and some other components and two shields and inner (grid) one and an outer one (the chassis).

On the outside of the foundation (under it) (see fig. 2-33) are/the sliding mechanism for the coupling loop, the anode blocking condenser and air ducts of the ...-78 vacuum tube air cooling system.

On the inner side of the foundation, mounted on ceramic insulators, are the oscillating circuit components (resonant line tubes).

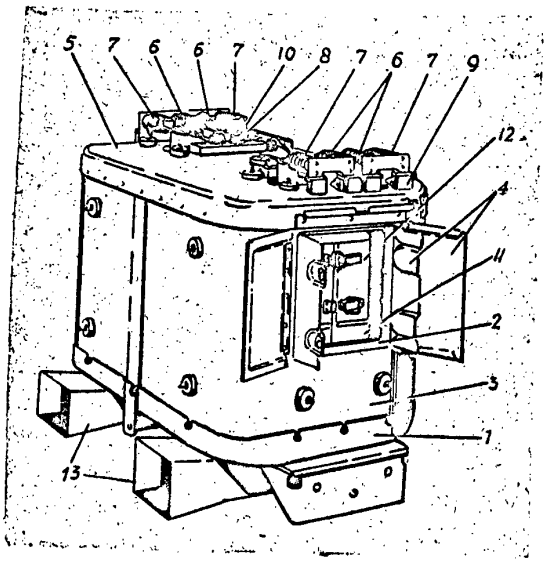

Fig. 2-31. The sixth stage block:

1-foundation, 2-inner (grid) shield; 3-outer (chassis) shield; 4-shield doors; 5-cover of the outer shield; 6-cathode blocking chokes (L.109-3, L.109-2, L.109-5 and L.109-4); 7-filament blocking chokes (L.109-9, L.109-8, L.109-11 and L.109-10); 8-second power amplifie (fifth stage) coupling condensers (C.116-3 and C.116-2); 9-blocking condensers (G.102-3, C.102-24, C.102-23 and C.102-32); 10-..-78 vacuum tube sockets, 11-resonant line tube; 12-side door of the resonant line tube; 13-air ducts of the ...-78 vacuum tube air cooling system.

The oscillating circuit of the fifth (analogically) also the sixth) stage consists of two parallel silvered brass tubes with a loop between them (in the sixth stage with two loops)

SECRET
NO FOREIGN DISSEM
Declassified in Part - Sanitized Copy Approved for Release 2013/10/18 : CIA-RDP80T00246A071100330001-5

Declassified in Part - Sanitized Copy Approved for Release 2013/10/18 : CIA-RDP80T00246A071100330001-5

50X1-HUM

and a variable condenser attached between the upper ends of the resonant line tubes.

The shaft of the condenser is brought out through the double shielding and is there equipped with a pulley and is connected to the communication channel automatic tuning device.

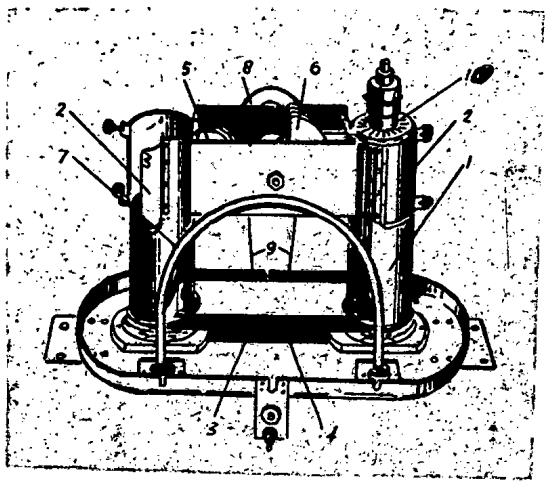

Fig.2-32. Foundation of the fifth stage block (general) view.

1-resonant line tube; 2-side door of the resonant line tube; 3-stationary connecting bar; 4-stator of the variable capacitance condenser C. 113; 6-rotor of the condenser C.113; 7-coupling loop; 8-pulley on the co condenser shaft; 9-cable,; 10-type ...-78 metal-ceramic triode.

At the upper end resonant line tube has side-doors for changing the type -7 vacuum tubes. The tubes (piper) and doors have cut- out for the bosses on the anode cooling fins of the vacuum tubes. When the vacuum tubes are inserted thede bosses must enter the cut-outs (when chancing the vacuum tubes this rule must be obeyed, for otherwise the doors cannot close and the vacuum tubes will not be held properly intheir sockets).

A brass connecting (shorting) strap is located between the bottom ends of the resonant line tubes (pipes) of the fifth stage. Between the bottom ends of the resonant line tubes (pipes) of the sixth stage are two brass connecting (shorting) bars, one of which is fixed, whereas the other one is placed slightly higher and is adjustable. The adjustable connecting (shorting) bar is used for changing the inductance value of the oscillating circuit.

Declassified in Part - Sanitized Copy Approved for Release 2013/10/18 : CIA-RDP80T00246A071100330001-5

Declassified in Part - Sanitized Copy Approved for Release 2013/10/18 : CIA-RDP80T00246A071100330001-5
NO FOREIGN DISSEM

50X1-HUM

to enable its tuning to the working range of the transmitter (100 to 160 Mc.). Therefore the initial adjustment of the movable strap is made at the factory when adjusting the transmitter . Operating instructions do not permit to move this strap.

The foundation carries a coupling loop beside the oscilating circuit (on the base of the fifth stage the coupling loop ofthe sixth stage the coupling loop with a symmetriaation device).

The coupling loop is fastened to a special phonolic laminated plate with a nut attached to its center. A lead-screw is screwed into this nut and it is attached rotably to tthe base.

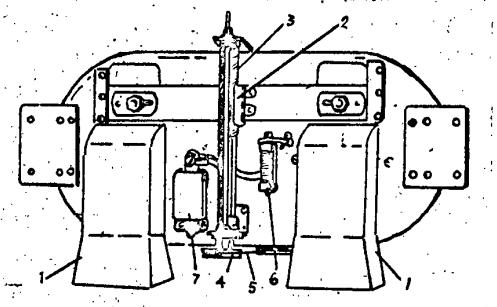

Fig. 2-33. Foundation of the fifth stage block bottom view):

1.- air ducts of the -76 vacuum tube air cooling system;
2.- mounting of the coupling loop; 3- lead screw; 4-aumilliary pulley; 5- cable; 6- second power amplifier (Fifth stage) vacuum tube anode circuit blocking choke (L 103); 7- fifth atage vacuum tube anode circuit blocking condenser (C 114).

By turning the lead screw , the coupling loop slide forth and back: the coupling loop either approaches the oscillatingcircuit of the stage , or moves away from it.

The lead screw of the fifth stage is turned by a screwdriver (the screw is slotedfor this purpose) , but the lead screw of the sixth stage is turned by a handle attached at is longer front end.

The oscillating circuit and the coupling loop of the fifth (analogically also the sixth) stage are shielded by a double shield consesting of an inner and an outer shield

SECRET
NO FOREIGN DISSEM
Declassified in Part - Sanitized Copy Approved for Release 2013/10/18 : CIA-RDP80T00246A071100330001-5

Declassified in Part - Sanitized Copy Approved for Release 2013/10/18 : CIA-RDP80T00246A071100330001-5
NO FOREIGN DISSEM

50X1-HUM

The inner shield (the grid shield) is a brass box with rounded corners; the box is closed (at the top), and is opened at the bottom.

On the narrow side wall the shields have doors to facilitate access to the vacuum tubes for their changing.

The ceiling of the inner shield carries sockets of the -7B vacuum tubes.

The ceiling of the inner shield of the fifth stage block carries two vacuum tube sockets, whereas the ceiling of the inner shield of the sixth stage block carries four vacuum tube sockets. At the place where the vacuum tube sockets are attached to the shield there are appropriate cut-outs.

The tube sockets have three concentric spring contacts. The innermost contact is for the filament prong of the -7B vacuum tube, the middle contact is for the cathode ring contact, and the outermost contact is for the grid ring contact of this vacuum tube.

The outer (Chassis) shield form a brass box with rounded corners the box is closed (at the top) on one side and od the other side (at the bottom) it is open. The shape of the outer shields is similer to tehe inner shield. The dimensions of the outer shield are greather than those of the inner one by such an amounnt that the air gap between the two shields is 10 mm.

The outer shield has doors in the side walls located in the same place as the inner shield in order to enable access to the vacuum tubes.

The to (ceiling) of the outer shields have cut-outs to accomodate the projecting vacuum tube sockets (the filament and the cathode connections) mounted on the lower shield.

Cathode blocking chokes, blocking condensers and semi variable coupling condensers are mounted on the outside of the

SECRET
NO FOREIGN DISSEM
Declassified in Part - Sanitized Copy Approved for Release 2013/10/18 : CIA-RDP80T00246A071100330001-5

Declassified in Part - Sanitized Copy Approved for Release 2013/10/18 : CIA-RDP80T00246A071100330001-5

50X1-HUM

outer shields.

The fifth and sixth stage blocks are attached inside the high frequency section frame; the bloch of the fifth stage in the upper part of the frame and the block of the sixth stage ~~in~~ in ~~the upper part of the frame and the block of the sixth stage in~~ the lower part.

The symmetrization block. The block of the symmetrization unit (see fig. 2-34) is a brass tube (the enclosing cylinder) closed at the bottom and open on top. Inside this cylinder are two symmetrically placed brass tubes. The bottoms of the tubes are soldered to the bottom of the cylinder. In one of these tubes the quater wavelength transformer - it is a rod with such a diameter as to achieve the required resonent line impedance (41.5 ihms). The transformer bottom contains a connector for atachemnat ent of the feeder which connects the transmitter to the reception-transmit-~~tar~~sion relay.

The other (second) tube is the symmetrization extention and is connected by means of a metal strap to the transformer rod.

From the transformer rod and from the transformer tube , two leads extend at the open end of the enclosing cylinder and they lead to the coupling loop or the output (sixth) stage of the transmitter.

The symmetrization unit is fastened to the high frequacy section frame by aspecial holder.

The reception- transmission relay block. The reception-transmission relay (see fig. 2-35) consist of three part: an aluminium housing and a silumin cast "T" section and a cast silumin frame. These parts are bulted together.

Inside the aluminium housing are the electromagnetic relay and the 15-contact plug.

The relay contact system contains both make and break contacts. The relay armature shaft is fastened in two specialk holder

Declassified in Part - Sanitized Copy Approved for Release 2013/10/18 : CIA-RDP80T00246A071100330001-5

Declassified in Part - Sanitized Copy Approved for Release 2013/10/18 : CIA-RDP80T00246A071100330001-5
NO FOREIGN DISSEM

outside the housing , but inside the cast frame at the upper end of the armature shaft is a bracket with a ceramic rod.

When the relay is de-energized, the relay armature is returned by a spring.

The T section is made of two parts - a front and a rear one which are bolted together.

Inside the "T" section is the vacuum type 3-2 transfer switch and three bushings with receptacles for the coaxial cable connectors through leading to: the antena, the symmetrization element, and the receiver.

The stationary vacuum transfer switch contacts are coonected to two side arm through bushing terminals and the movable contact is connected to the crosswise arm through the bushing terminal of the "T" section.

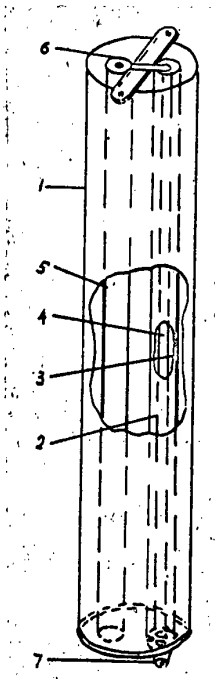

Fig. 2-34. Symmetrization unit:
1- upright tube ; 2- outer wavelength transformer ; 3- outer transformer conductor ; 4- inner transformer conductor; 5- symmetrization insert; 6- jumper; 7- connector for connecting the high frequency cable K102.

NO FOREIGN DISSEM
Declassified in Part - Sanitized Copy Approved for Release 2013/10/18 : CIA-RDP80T00246A071100330001-5

Declassified in Part - Sanitized Copy Approved for Release 2013/10/18 : CIA-RDP80T00246A071100330001-5
NO FOREIGN DISSEM

50X1-HUM

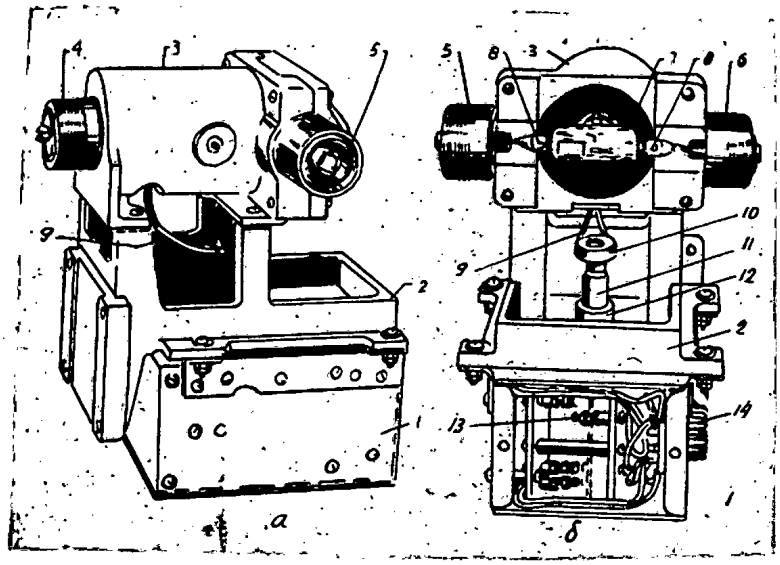

Fig. 2-35.(The reception-transmission relay block (a-general view of the block from the right hand side . -view of the block with the rear wall of the box removed and the three way section ("T") uncovered) :

1.- box with the electromagnetic relay and and the connecting terminal board ; 2- frame ; 3- the "T" section ; 4- front connector for connecting the high frequency cable (K101) leading to the antenna ; 5-side connector for connecting the high frequency cable (K102) leading to the symmetrization unit : 6- side connector for connecting the high frequency cable (K103) leading to the receiver : 7- vacuum transfer switch B -2 ; 8 leads of the vacuum transfor switch stationary contacts ; 9 leads of the vacuum transfor switch movable contacts; 10 - guide of the coupler ; 11 - ceramicholder ; 12- coupler of the electromagnetic relay ; 13- electromagnetic relay (102); 14-15 - connecting terminal board (102-2).

When the relay is energized , its armature overcomes the return force of the spring , partially rotates around its axie and makes one set of contacts and breaks another set of contacts.

Besides this the armature rotates the ceramic rod and the holder fastens to it which in turn rotates another holder which fxem switches the movable contacts of the vacuum transfer switch from one fixed contact to the other fixed contact.

The block is attached by screwes inside the high frequency section frame.

SECRET
NO FOREIGN DISSEM
Declassified in Part - Sanitized Copy Approved for Release 2013/10/18 : CIA-RDP80T00246A071100330001-5

Declassified in Part - Sanitized Copy Approved for Release 2013/10/18 : CIA-RDP80T00246A071100330001-5
NO FOREIGN DISSEM

50X1-HUM

The instrument and modulation monitor block. The instrument and monitor block (see fig. 2-27) is used for adjusement or the transmitter and for the controlof it function.

This block consists of an aluminium panel with meters , meter shunts , selector switches , the modulation monitor and a 15-contact terminal board.

On the upper part ~~xxxxx~~ of the panel (from left to right) are the following instruments:

1. The 105 milliameter (0 to 500 ma) for metering the output power amplifier vacuum tube grid currents (the sixth stage) and for adjusement of the second power amplifier (the fifth stage) Above the meter is the inscription " " (" tuning of the fifth stage).

2. The 106 milliameter (o to 1 ma) for tuning of the sixth stage and for current adjustment of the modulation monitor main detector load ., for reading the modulation level. The instrument scale has a red and a green line at the 0.3 and 0.7 ma values. Above the meter is the inscription " " ("tuning of the sixth stage).

3. The 107 milliameter for modulation level measurements (the instrument has a scale with graduation from 0 to 110) indicating the modulation coefficient in persentages. Above the meter is tthe inscription " " ("modulation level).

4. The 104 voltmeter (0 to 3 Kvx) for measuring the high voltage transmitter supply (or the order of 1.3 kV). above the instrument is the inscription " " ("anode voltage).

5. The 103 ammeter (0 to 2 amps) for measuring the tomtal (anode and grid) current of the fifth and sixth stage vacuum tubes. Above the instrument is the inscription " " ("total current of the fifth and sixth stage").

SECRET
NO FOREIGN DISSEM
Declassified in Part - Sanitized Copy Approved for Release 2013/10/18 : CIA-RDP80T00246A071100330001-5

Declassified in Part - Sanitized Copy Approved for Release 2013/10/18 : CIA-RDP80T00246A071100330001-5
NO FOREIGN DISSEM

50X1-HUM

In the center of the panel is a knob of the a djustable resistor for current adjustment of the modulation monitor in detector load. Above the knob is the inscription "
" (" modulation meter adjustment").

On the Lower part of the panel (from left to right) are the f following meters and selector switch knobs:

1. The knob of the 101 selector switch (used for tuning of t the first four stages) mounted on the rear side of the panel. Above the knob on four bosses (in the clockwise direction) are t the numbers "1" , "2" , "3" and "4".

2. The 101 milliameter (0 to 1 ma) for tuning of the first four stages. Above the instrument and the knob of the 101 selector switch is the inscription " 1,2,3,4 " ("tuning of the first , second , third , and fourth stages.)

3. The 102 milliameter (from 0 to 250 and from 0 to 500 ma) (with external shunts) for the control of the symmetry of the circuit branches of the fifth and sixth stages (for measurement of the cathode current of each tube of these stage).

4. The knob of the 102 selector switch (used of the control of the symmetry of the circuit branches of the fifth and sixth stages) mounted of the rear side of the panel. Above the knob on four color red bosses (in the clockwise direction) are the numbers "1" , "2" , "1" , "2" , "3" and "4" and above the 102 meter and the knob of th the 102 selector switch is the inscription " " ("symmetrization of the fifth and sixth stages).

In the lower center of the panel is a square cut-out (window) covered with a cover (for access to the crystals) on which is the inscription " " ("crystals"). An aluminium chassis containin all the modulation monitor component is attached to the rear side of the panel in its center.

SECRET
NO FOREIGN DISSEM
Declassified in Part - Sanitized Copy Approved for Release 2013/10/18 : CIA-RDP80T00246A071100330001-5

Declassified in Part - Sanitized Copy Approved for Release 2013/10/18 : CIA-RDP80T00246A071100330001-5
NO FOREIGN DISSEM

On the top of the chassis in the center is the twin-diode 6 X 6 C. Details of the audio frequency input filter (Coils and condensers) are mounted on a special holder and they are fastened by screws to t the front side of the high frequencyies section. On the rear side of the panel are further two meters (106 and 107).

A through bushing with a brass chassis spring a mounted on the side of the modulation monitor chassis.

On the rear side of the instrument panel are the following components: an 101 meter shuht; six 102 meter shunts; two selector switches (101 and 102); and a 15 -contact terminal board.

The instrument and the modulation monitor panel is attached to t the front part of the high frequency section frame from the outside by screws with the contact spring of the through bushing on the modulation monitor chassis connected by the through bushing (mounts on a special holder) with the L120 coil of the audio frequancy input filter.

The transmitter monitor block. The transmitter monitor block (see fig. 2-36) consists of an aluminium chassis containing all the component of the block. The block is attached by screws to the inside of the high frequency section.

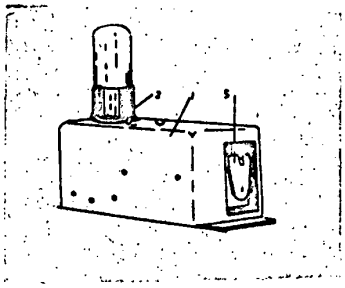

Fig. 2-36. The transmitter operation indicator block:
1. chassis;2- vacuum tube 6H8C (105);3-electromagnetic relay (103)

The automatic tuning block.The su otune block (see fig. 2-27) is mounted on a masive metal foundation and from the top is onclosed with a special cover. The foundation carries six

SECRET
NO FOREIGN DISSEM
Declassified in Part - Sanitized Copy Approved for Release 2013/10/18 : CIA-RDP80T00246A071100330001-5

Declassified in Part - Sanitized Copy Approved for Release 2013/10/18 : CIA-RDP80T00246A071100330001-5
NO FOREIGN DISSEM

50X1-HUM

autotone heads - mechanism for the automatic tuning of four preselected wavelength (channel), couplings, a type -40 electric motor relays, selector switches and a 15-contact terminal board.

The block is fastened to the outside of the high frequency section (in the front center) frame by screws.

The transmission cable block. The transmission cable block is used for transmitting the motion of the automatic communication channel tuning mechanism (autotone) to the shaft of the individual circuit variable condensers.

The coupling of the xxx autotone shafts with the pulley shafts of the transmission cable pulleys is accomplished by splined shafts For ensuring the proper coupling of the shaft, the inside of the xxx shaft opening has enlarged splined which must mesh the enlarged splines of the outer surface of the other shaft.

To ensure accurate tuning of the fifth and sixth stage circuit the transmission of the autotone rotation to the condencer shaft is a reduction transmission and, therefore, the condenser shaft pulleys have a diameter two times larger than the autotone pulleys have.

As a result of this, more accurate adjustment of the circuit condencers is achieved during the switching of the protuned communication channel.

3. The audio frequency (second) section of the transmitter.

The audio frequency section (fig. 2-39 and 2-40) consists of four blocks:

1. The modulating block;
2) The central Control block;
3) The vacuum tube voltmeter block;
4) The frequency distortion equalizing block.

SECRET
NO FOREIGN DISSEM
Declassified in Part - Sanitized Copy Approved for Release 2013/10/18 : CIA-RDP80T00246A071100330001-5

Declassified in Part - Sanitized Copy Approved for Release 2013/10/18 : CIA-RDP80T00246A071100330001-5
NO FOREIGN DISSEM

The front side of the audio frequency block is formed by the central unit block. In the front of this panel are two handles for mounting the section in the transmitter relay rack.

On the rear of the central control block on its right hand side is the equalizing block , and of the left hand side is the modulating block.

The vacuum tube voltmeter is located on the horizontal chassis of the modulating block at left in front.

The block are connedted into an electrical unit of the audio section by means multicontact terminal boards.

The modulation block and the central control block are interconnected.

The audio frequency section is bolted to the transmitterrack,

The modulating block.The modulating block frame (see figures 2-37 and 2-38)carries the entire weight of the modulatimg assembly and its consists of two aluminium side brackets connected with each other by a horizontal steel chassis. The outer sides of the bracket have guide rails which , when assembling the block into the transmitter rack, fit the guides in the central part of the rack.

The following components are located on top of the horizontal chassis. (see fig. 2-27):

- at left and in front - the vacuum tube voltmeter block and the input transformer;

- in the center - the first stage vacuum tube and the two audio frequency preamplifier vacuum tubes of the second stage and the automatic modulation level control vacuum tube;

- at left in the rear - the coupling transformer:

- at right in front - the modulating autotransformer on which the blocking condensers and resistors are located and which shunt the autotransformer winding;

SECRET
NO FOREIGN DISSEM
Declassified in Part - Sanitized Copy Approved for Release 2013/10/18 : CIA-RDP80T00246A071100330001-5

Declassified in Part - Sanitized Copy Approved for Release 2013/10/18 : CIA-RDP80T00246A071100330001-5
NO FOREIGN DISSEM

50X1-HUM

- in the rear - two type 80 modulator vacuum tubes.

On top of the horizontal chassis is a special vertical "T" shaped double shield separating the units and components which which are located on the left hand side of the chassis , the autotransformer and the modulator vacuum tubes on the right hand side and also separating the autotransformer from the modulator vacuum tubes. That section of the shield which separates the autotransformer from the modulator vacuum tubes has , on top , through bushings for the high voltage. On the vacuum tubes side of these bushings , leads with anode spring caps for the anode tube leads are connected to the through bushings.

Underneath the horizontal modulating block chassis (see fig. 2-39) are the resistors and the condensers of the audio frequency preamplifier , of the modulator , of the automatic modulator level control and of the modulator bias voltage divider. A great proportion of the audio frequency preamplifier resistors and blocking condensers are mounted on terminal springs.

On the vertical wall of the modulator block chassis is one 7-contact terminal board (for connectingto the central control block) and on the rear wall is one 14-contact terminal board and a panel with three high voltage through bushings.

The element and details are connected into a complete unit by individual conductors and by a wiring harness.

The bottom of the chassis is covered by a steel shield.

The vacuum tube volymeter block. A part of the vacuum tube voltmeter element are mounted on the central control block. These components consists of the 401 millimeter , the 4 toggle switch and the resistors R408 , R403-1 and R412. The remaining vacuum tube voltmeter components are mounted in

SECRET
NO FOREIGN DISSEM
Declassified in Part - Sanitized Copy Approved for Release 2013/10/18 : CIA-RDP80T00246A071100330001-5

Declassified in Part - Sanitized Copy Approved for Release 2013/10/18 : CIA-RDP80T00246A071100330001-5

50X1-HUM

a separate enclosed housing , located on the modulator block. The housing has two compartments: an upper and a lower one.

The upper compartment contains vacuum tubes and a panel with three condensers : access to this compartment is enabled by removable cover. The lower compartment contains the R138 potentiometer , a panel with resistors , a small block of three condensers and several loose resistors. The R138 potentiometer shaft is brought through to the upper section of the housing; rotation of the shaft is accomplished by a screwdriver.

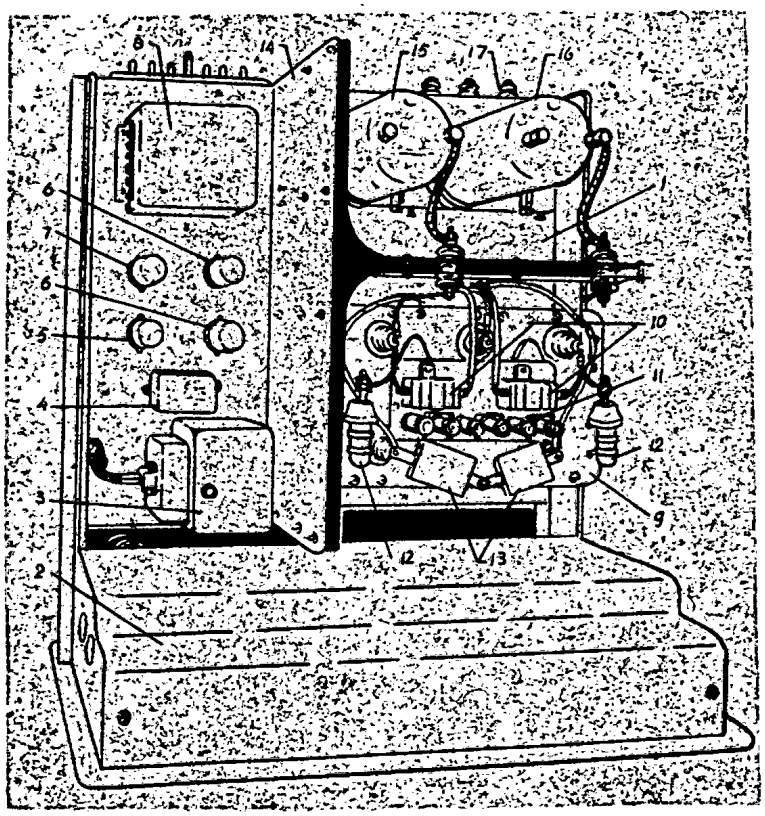

Fig. 2-37. Transmitter audio frequency section (top view): 1- modulator block; 2- central control unit block; 3- vacuum tube voltmeter block; 4- input transformer (T101); 5- preamplifier first stage vacuum tube 6H6S (105-1); 6- preamplifier second stage vacuum tubes 6 6C (102-1) and (102-2); 7- automatic modulation level control (AP K) vacuum tube 6H8C (105-1); 8- coupling transformer (T102); 9- modulation autotransformer (T103); 10- modulator negative feedback circuit blocking condensers (C124 and C124-1);11- autotransformer winding shunting load resistors (R151 and R151-1);12- CY-80 vacuum tube anode

Declassified in Part - Sanitized Copy Approved for Release 2013/10/18 : CIA-RDP80T00246A071100330001-5

Declassified in Part - Sanitized Copy Approved for Release 2013/10/18 : CIA-RDP80T00246A071100330001-5
NO FOREIGN DISSEM

blocking condensers (C114-2 and C114-1); 13- blocking condensers (C126 and C126-1); 14- "T" shaped double shield; 15- "left" modulator Y-80 vacuum tube (106-1); 16- right modulator Y 80 vacuum tube (106); 17- panel with three high voltage contacts (in through bushings).

A panel with chokes and condensers of the audio frequency filter is located on a side wall of the housing . This block is covered by a shield in which the 6-contact T107-1 terminal board is fastened.

4. The air cooling system for the vacuum tubes -76.

The air cooling system for the type -76 vacuum tubes (see fig. 2-36) consists of a ventilator (centrifugal type driven by a 3-phase alternating current type 775 electricmotor) and air ducts.

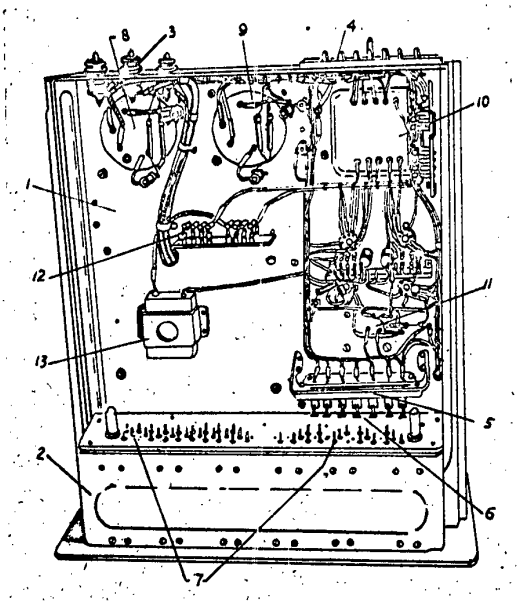

Fig. 2-38. Transmitter audio frequency section (rear view with the shield removed):
1- modulator block; 2- central control unit block;3- panel (T111) with three high voltage contacts (in throughh bushings); 4-connecting terminal board (109);7- contact; 4- connecting terminal board (110) of the connecting; 6-7- contact section (404) of the connecting terminal board (404- 405); 7- contact section (405) of the connecting terminal board (404 - 405); 8- "right

Declassified in Part - Sanitized Copy Approved for Release 2013/10/18 : CIA-RDP80T00246A071100330001-5

Declassified in Part - Sanitized Copy Approved for Release 2013/10/18 : CIA-RDP80T00246A071100330001-5
NO FOREIGN DISSEM

hand -80 vacuum tube socket ; 9- "left" hand -80 vacuum tube socket 10- coupling transformer (T102);11- input transformer (T101); 12- bracket with negative feedback circuit resistors (R131,to R 131-7);13- 80 vacuum tube screen grid blocking condenser (C125)

The cold air intake has an intake funnel facing the cutout in the relay rack side wall covered by an oil type air filter. The o oil type air filter is used for cleaning the air from dust and other small particles. Before instalation inti the air cooling system, the filter is dipped (by dipping it into a container) in a solition of oil and gasoline (petrol)(the solution consists of one part of oil and three parts of gasoline).

The cleaned air is driven by the ventilator to the main air duct which later branches out to the anodes of the -7B vacuum tubes of the fifth and sixth stages.

The air which has been heated by passing over the cooling fins of the -7B vacuum tube anodes exhausts through a screen covered rectangular cutout in the front wall of the transmitter rack.

Inside the air duct is a special flap which is rotated by the passing air. This flap closes the electrical contacts of the high voltage breaker interlocking circuits (including the 1.35 KV. control circuit). This switch is located outside theair duct. In case that the air does not pass through the air duct,these contacts remain open and the 300 V. 600 V and1350 V upply circuits Cannot be connected to the transmitter.

The air interlocking of the 1.35 KV and of the other high voltage is accomplished in this way. This interlocking switch protects the -7B vacuum tubes against accidental failures in case that the high voltage should be on the anodes and the air cooling system should not work.

Declassified in Part - Sanitized Copy Approved for Release 2013/10/18 : CIA-RDP80T00246A071100330001-5

Declassified in Part - Sanitized Copy Approved for Release 2013/10/18 : CIA-RDP80T00246A071100330001-5
NO FOREIGN DISSEM

50X1-HUM

The design and assembly of the filament transformers for the transmitter vacuum tubes and of the power supply rectifier are described in chapter 5.

SECRET
NO FOREIGN DISSEM
Declassified in Part - Sanitized Copy Approved for Release 2013/10/18 : CIA-RDP80T00246A071100330001-5

Declassified in Part - Sanitized Copy Approved for Release 2013/10/18 : CIA-RDP80T00246A071100330001-5
NO FOREIGN DISSEM

50X1-HUM

CHAPTER 3

THE RECTIVER AND THE RECEPTION APPARATU

A. The receiver.

3-1/ The receiver block diagram and its special features.

The ultra shortwave radiotelephonic type ..... receiver is a 13 tube superhyterodyne apparatus with double mixing. The block diagram of this receiver is given by figure 3-1.

The range of the receiver is from 100 to 150 Mc. (wavelengths from 2 to 3 meters).

The hyterodyne receiver is crystal stabilized. The receiver cannot operate without the crystals.

The sensitivity of the receiver is of the order of 12 microvolts. With a two fold attenuation the band pass width is not less than 70 Kc. and with a hundred fold attenuation the band width is not greater than 300 Kc.

The receiver may be fixed for any four pretuned frequencies (channels) (by means of the proper crystals). The tuning elements of the auxilliary circuits of the receiver - the variable condensers - are coupled with an automatic electro-mechanical tuning device (different from the similar device in the transmitter).

The preliminary tuning of the comunication channels is manual and the repeated tuning is automatic by means of the electromechanical tuning device; the choise of any of the four pretuned and fixed channels is accomplished by more pressing

SECRET
NO FOREIGN DISSEM
Declassified in Part - Sanitized Copy Approved for Release 2013/10/18 : CIA-RDP80T00246A071100330001-5

Declassified in Part - Sanitized Copy Approved for Release 2013/10/18 : CIA-RDP80T00246A071100330001-5
NO FOREIGN DISSEM

50X1-HUM

controls.

The first receiver stage is a high frequency (U F) amplifier and is inductively coupled to the antenna by a tuned circuit. The signal voltage amplified by this stage and the hyterodyne signal voltage are applied to the first mixer which generates in its anode load (anode circuit) the first intermediate frequency signal.

The hyterodyne of the receiver consists of two stages: the crystal oscillator and the frequency multiplifier.

The value of the first intermediate frequency is variable and depends on the frequency of the signals.

The intermediate frequency voltage and the same heterodyne frequency are applied to the second mixer which generates in its anode load (anode circuit) the second intermediate frequency signal. This signal voltage is amplified by three intermediate frequency amplifie stages.

The second intermediate frequency is , as against the first intermediate frequency , constant and is equal to 12 Mc.

From the third intermediate frequency amplifier stagex the signal voltage is applied to the main channel detector and to the quieting and automatic volume control circuit detectors.

After the detection of the mixm main channel the signal voltage is amplified by two audio frequency amplifier stages: the preamplifier and the output amplifier.

The negative bias obtained from the quieting circuit is applied to the grid of the first audio frequency amplifier (preamplifier) vacuum tube.

The negative bias obtained from the automatic volume control system is applied to the control grids of the ultra high frequency stage, to the first mixer and to the first and second intermediate frequency stage vacuum tubes.

SECRET
NO FOREIGN DISSEM
Declassified in Part - Sanitized Copy Approved for Release 2013/10/18 : CIA-RDP80T00246A071100330001-5

Declassified in Part - Sanitized Copy Approved for Release 2013/10/18 : CIA-RDP80T00246A071100330001-5
NO FOREIGN DISSEM

50X1-HUM

The following foltage supplies are necessary for the operation of the receiver.

1) 26 V - for the vacuum tube filament and for the stepping relay;

2) 105 V - for the vacuum tube grid bias;

3) 275 V - For the vacuum tube anodes and screen grids.

The main special features of the receiver are the following:

1. Any receiver with crystal stabilization of several fixed hyterodyne wavelengths (frequencies) must be tuned in one or another way in advance.

The preliminary tuning of the ..... receiver to the four fixed frequencies is accomplished without a signal generator by means of the measuring apparatus (block .....) belonging to the transmitter.

2. The receiver uses a special system of amplified delayed automatic volume control which removes interference when receiving strong near-by located radio stations.

The receiver amplitude characteristic with input signals stronger than 20 microvolts is almost flat regardless whether receiving signals from near-by stations with a large power , or whether receiving distant station s with a smaller power (within the action radius) and the volume of the receiver is , for practical purposes , constant.

3. The receiver has an electronic noise quiter and a noise quieter controled detector.

The noise quieter is a special arrangement which , during the absence of a signal from the other communicating station, automaticelly blocks the receiver (block the first audio frequency amplifier stage vacuum tube). The importance of the noise quieter lies in the fact that the radio operator is freed

SECRET
NO FOREIGN DISSEM
Declassified in Part - Sanitized Copy Approved for Release 2013/10/18 : CIA-RDP80T00246A071100330001-5

Declassified in Part - Sanitized Copy Approved for Release 2013/10/18 : CIA-RDP80T00246A071100330001-5
NO FOREIGN DISSEM

50X1-HUM

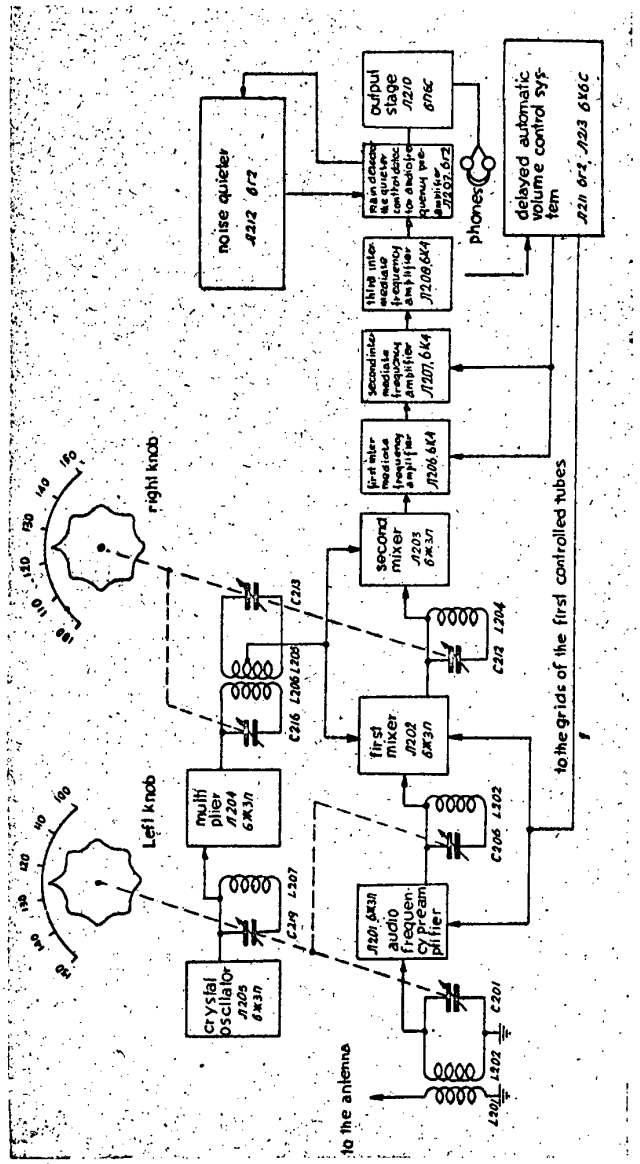

Fig. 3-1. The block diagram of the type .....receiver.

SECRET
NO FOREIGN DISSEM
Declassified in Part - Sanitized Copy Approved for Release 2013/10/18 : CIA-RDP80T00246A071100330001-5

Declassified in Part - Sanitized Copy Approved for Release 2013/10/18 : CIA-RDP80T00246A071100330001-5
NO FOREIGN DISSEM

50X1-HUM

from the effects of the hissing and crackling noises during the absence of the signal. When the noise level in low.,the noise quieter may be disconnected by the ...201 toggle switch. The detector controlling the noise quieter automatically unblock the receiver when a signal of the other communicating station , stronger than the noise level adjustment of the receiver , appears. The signal level at which the effect of the noise quiter is overcome - the noise level threshod - is regulated by a knob simultanecusly with the adjustment of the receiver sensitivity.

4. The receiver uses a special circuit of two mixers with a single heterodyne oscillator which results in a greater atenuation of reflected frequencies , in increased receiver sensitivity and ensures more dependable operation.

5. During broadcasting , the screen control voltage are turned off and all of the vacuum tubes with the exception of the ..,209 and ...210 are cut aff by agreat negative bias voltage, This way the turning off the high voltage is avoided.

3-2. The schematic diagram of the receiver.

1. The high frequency input amplification and mixing.

The input circuit and the high frequency amplifier. The high frequency amplifier (fig. 3-2) uses a type ..... high frequency beam tetrode (...201).

The amplifier frequency range is from 100 to 150 Mc.

The amplifier input circuit consists of a single tuned circuit consisting of the coil L202., the variable condenser C201 and the trimmer condenser C202. The C239 condenser is used for frequency compensation of the circuit with a change in ambient temperature and the condenser C225 is used for covering the necessary frequency range.

SECRET
NO FOREIGN DISSEM
Declassified in Part - Sanitized Copy Approved for Release 2013/10/18 : CIA-RDP80T00246A071100330001-5

Declassified in Part - Sanitized Copy Approved for Release 2013/10/18 : CIA-RDP80T00246A071100330001-5
NO FOREIGN DISSEM

50X1-HUM

The input circuit high frequency voltage is coupled by the coupling condenser C204 to the controle grid of the ultra high frequency vacuum tube.

The ultra high frequency anode circuit consists of the coil L203 , the variable condenser C206 and the trimmer condenser C205.

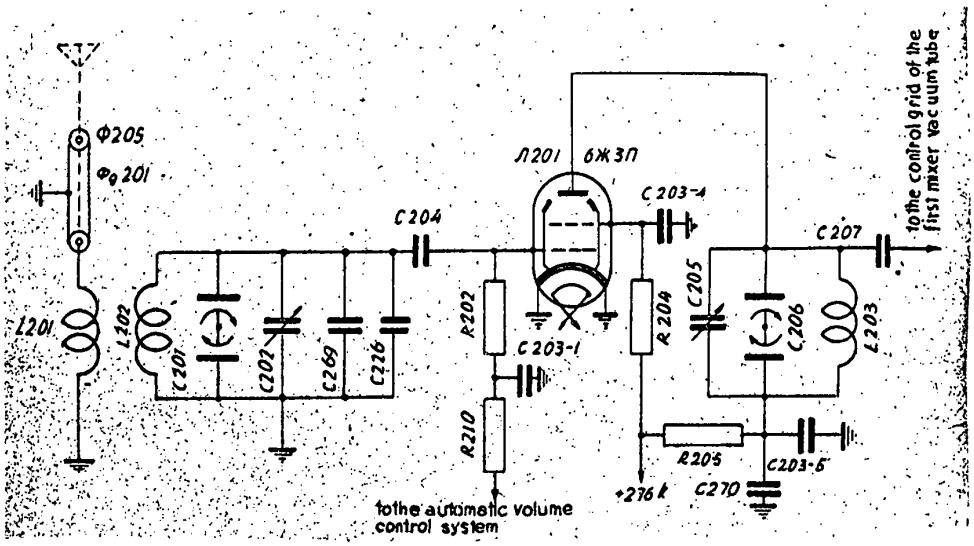

Fig. 3-2. The schematic diagram of the high frequency amplifier.

The coupling condenser C207 couples the received and amplified signal voltage to the grid circuit of the first mixer.

The ultra high frequency anode supply voltage is conducted from contact 8 of the connector 202 across the meter shunting resistor R259 (for metering the total current flowing through the anode screen grid circuit) and the dropping resistor R205; the screen grid voltage comes from the same contact via one shunting resistor R259 and the dropping resistor R 204 (see the schematic diagram ini the appendix). The condensers C203-4, C203-5 and C270 are blocking condensers.

The negative control grid bias of the ultra high frequency vacuum tube comes from the automatic volume control system

SECRET
NO FOREIGN DISSEM
Declassified in Part - Sanitized Copy Approved for Release 2013/10/18 : CIA-RDP80T00246A071100330001-5

Declassified in Part - Sanitized Copy Approved for Release 2013/10/18 : CIA-RDP80T00246A071100330001-5
NO FOREIGN DISSEM

50X1-HUM

across the dropping resistor R210 and across the grid leak resistor R202. The C203-1 condenser is a blocking condenser

Both catode leads of the vacuum tube are grounded to prevent generation of parasitic oscillitions.

Tthe first mixer. The first mixer (fig. 3-3) uses a type ..... beam tetrode (202).

The high frequency amplifier signal is applied to the control grid and the heterodyne voltage is applied to the screen grid.

As a results of the common effect of the 100 to 150 Mc. signal voltage and the 44 to 69 Mc. heterodyne voltage the first mixer generates in its anode circuit the first intermediate frequency voltage (first IF) equal to the difference between the frequencies of the signal voltage (sig.F) and the heterodyne voltage (Het.F)

$$\text{First IF} = \text{Sig.F} - \text{Het. F} \qquad (3\text{-}1)$$

The first intermediate frequency may , therefore,be in the range from 56 to 81 Mc.

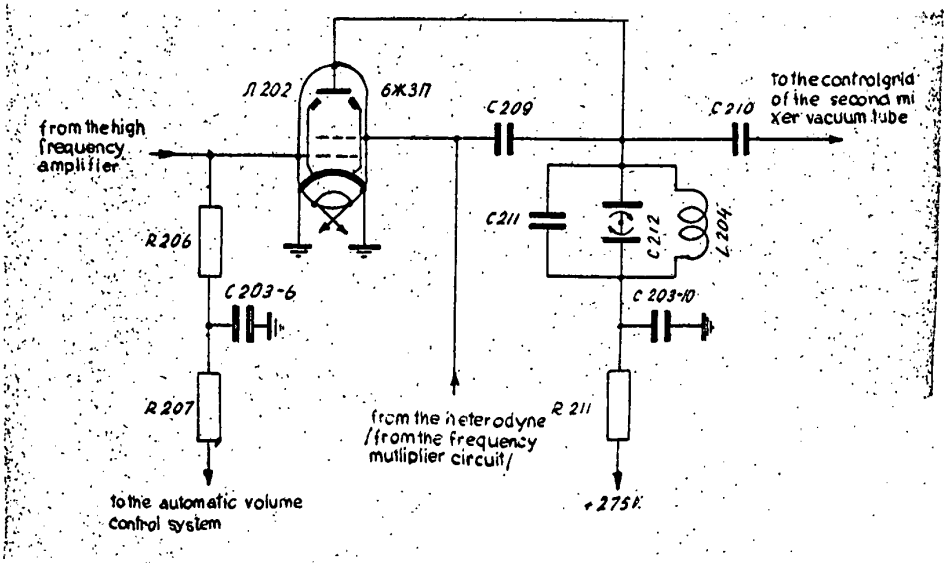

Fig. 3-3 The schematic diagram of the first mixer.

SECRET
NO FOREIGN DISSEM
Declassified in Part - Sanitized Copy Approved for Release 2013/10/18 : CIA-RDP80T00246A071100330001-5

Declassified in Part - Sanitized Copy Approved for Release 2013/10/18 : CIA-RDP80T00246A071100330001-5
NO FOREIGN DISSEM

50X1-HUM

The anode circuit of the first mixeris tuned to these frequency. The anode circuit consists of the L204 coil, The variable condenser C212 and the trimmer condenser C211.

The first intermediate frequency voltage of the first mixer anode circuit is coupled by the coupling condenser C210 to the control grid or the second mixer vacuum tube.

The anode supply voltage of the first mixer vacuum tube comes from contact 8 of the connector ...202 across the shunting resistor R259 and the dropping resistor R211 (see the circuit diagram of the receiver). The direct current screen grid voltage is also obtained from contact 8 of the connector ..202 across the shunting resistor R259 and the dropping resistor R209 and the coil L205 of the frequency multiplier band pass filter described later on. The condenser C203 - 10 is a block ing condenser.

The vacuum tube control grid negatieve bias is obtained from the automatic volume control system across the dropping resistor R207 and the grid leak resistor R206. The condenser C203-6 is ablocking condenser.

Both cathode leads of the vacuum tube are grounded for the same reason as in the high frequency amplifier.

The second mixer. The second mixer (fig. 3-4) uses a type ..... high frequency tetrode (...203).

The first intermediate frequency voltage is coupled to the control grid of the vacuum tube by the coupling condenser C210 and the heterodyne voltage is coupled to the screen grid of the vacuum tube by the coupling condensers C209 and C21) (see fig. ¼ 3-3 and 3-4).

As a result of the common effect of these voltage , the second mixer generates on its anode load a second intermediate frequency voltage (second IF) equal to 12 Mc. The voltage of

SECRET
NO FOREIGN DISSEM
Declassified in Part - Sanitized Copy Approved for Release 2013/10/18 : CIA-RDP80T00246A071100330001-5

Declassified in Part - Sanitized Copy Approved for Release 2013/10/18 : CIA-RDP80T00246A071100330001-5
NO FOREIGN DISSEM

This frequency is generated on a double circuit band pass filter (intermediate frequency) filter) .... -201 protuned to 12 Mc. The first circuit of the ..... -201 filter is connected in the second mixer vacuum tube anode circuit and the second circuit ....-201 filter is connected in the first stage of the intermediate frequency amplifier vacuum tube control grid.

From the above one my write , for clarification;

second IF = first IF - Het. F (3-2)
but first IF = Sig.F - Het. F
therefor second IF = Sig. F - 2 Het.F (3-3)

The second mixer vacuum tube anode supply comes from contact 8 of the connector ....202 across the shunting resistor R250 , the filter resistor R229 , the dropping resistor R231 and R224 and the filter coil L208; the screen grid supply voltage of the vacuum tube comes from the same contact 8 over the shunting resistor R259 and the dropping resistor R215 (see the receiver schematic diagram). The condensers C203-14, C227-1 and C227-16 are blocking condensers.

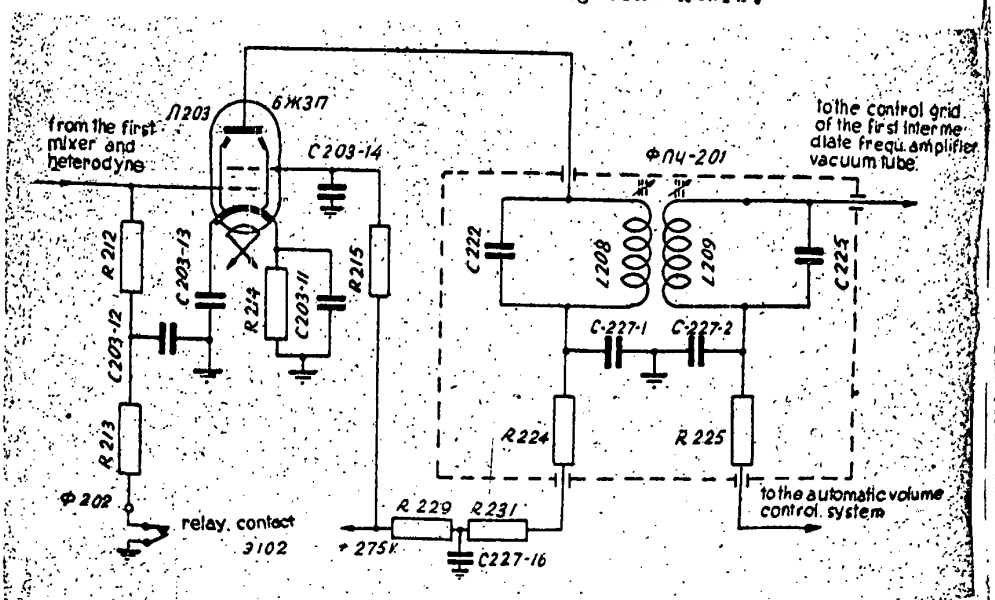

Fig. 3-4. The schematic diagram of the second mixer.

The vacuum tube control grid negative grid bias is obtained by self bias from the cathode resistor R214 across

Declassified in Part - Sanitized Copy Approved for Release 2013/10/18 : CIA-RDP80T00246A071100330001-5

Declassified in Part - Sanitized Copy Approved for Release 2013/10/18 : CIA-RDP80T00246A071100330001-5
NO FOREIGN DISSEM

50X1-HUM

& the decoupling resistor R213 and the grid leak resistor R212.

The condenser C203 - 12 is a blocking condenser.

Both cathodes leads are grounded , as far as the high frequency voltages are concerned , by the condensers C203-11 and C203-13 in order to prevent the generation of parasitic oscillation.

The crystal oscillator. The crystal oscillator (fig. 3-5) is of the electron coupled type and uses a tyne 6 3 beam tetrode (205).

The circuit diagram of the crystal oscillator is almost analogical with the circuit diagram of the transmitter crystal oscillator-exiter. Therefore , to fully understand the principle of the operation of the crystal oscillator heterodyne. refer to the description of the transmitter crystal oscillator driver describedearlier.

The crystals KB201 , KB 202, KB 203, and KB204 belong to the 1st , 2nd , 3rd , and 4th com unication channels stabilize the frequencies of the ranges from 4.838,89 to 5.972,22 Kc. and from 6.027,73 to 7.666,67 Kc (when receiving signals with frequencies from 100 to 119,5 Mc. and from 120,5 to 150 Mc.) and in the interval from 8,953..33 to 9.041,67 Kc. (When receiving signals with frequencies from 119,5 to 120,5 Mc.)

The anode oscillating circuit consists of the coil L207, The variable condenser C219 and the trimmer condenser C218 and it is tuned to the third (when receiving signals with frequencies from 100 to 119,5 Mc.and from 120,5 to 150 Mc.) or the second (when receiving signals with frequencies from 119,5 to 120,5 Mc.) harmonis frequency of the crystal and thus covers the range from 14,667 to 23 Mc. In the anode circuit of the crystal oscillator a voltage is generated which corresponds to the double or triple frequency of the oscillator.

SECRET
NO FOREIGN DISSEM
Declassified in Part - Sanitized Copy Approved for Release 2013/10/18 : CIA-RDP80T00246A071100330001-5

Declassified in Part - Sanitized Copy Approved for Release 2013/10/18 : CIA-RDP80T00246A071100330001-5
NO FOREIGN DISSEM

Note : If during the reception of signal with a frequency from 119,5 to 120,5 Mc. crystals with used in the crystal oscillator with frequencies in the interval from 6,972,22 to 6,027,78 Kc. and the anode circuit of this oscillator were tuned to the third harmonic of the oscillator vacuum tube anode current (to the third harmonic of the crystal), then the second harmonic of the oscillator vacuum tube anode current would be from 11.944 to 12,056 Mc.,i.e. it would have afrequency close to the intermediate frequency (12 Mc.). The double crystal frequency voltage of the crystal oscillator anode circuit would reach the intermediate frequency amplifier input trhough the supply circuit and alsoon account of the close spacing of the high frequency stages of the receiver as a result of this, the normal operation of the receiver would be impaired.

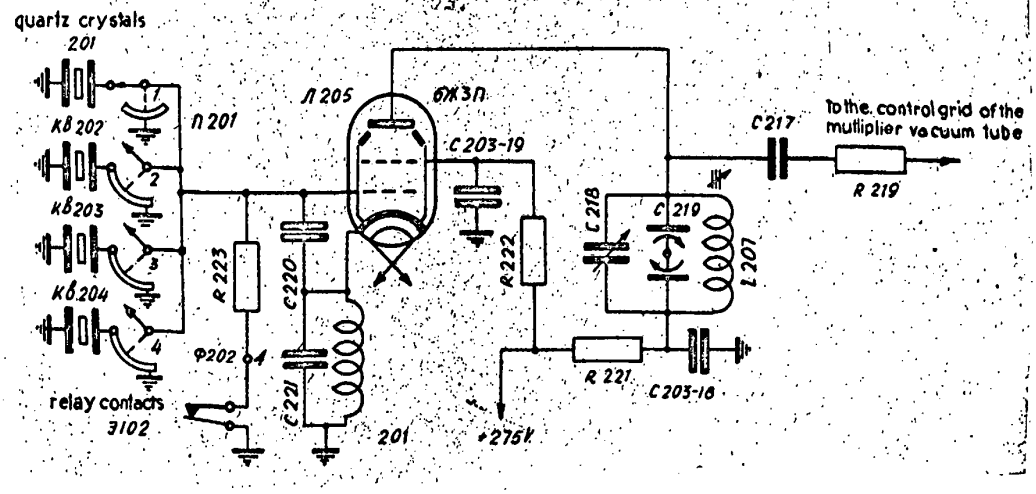

Fig. 3-3. Schematic diagram of the crystal oscillator.

The voltage generated in the oscillator anode circuit is coupled by the C217 coupling condenser and across the resistor R219 to the control grid of the frequency multiplier.

The crystal oscillator vacuum tube anode voltage comes

Declassified in Part - Sanitized Copy Approved for Release 2013/10/18 : CIA-RDP80T00246A071100330001-5

Declassified in Part - Sanitized Copy Approved for Release 2013/10/18 : CIA-RDP80T00246A071100330001-5
NO FOREIGN DISSEM

from contact B of the commnnector 202 across the shunting resistor R259 , the decoupling resistor R221 and the coil L206; and the screen grid voltage comes from the same contact across the shunting resistor R259 and the dropping resistor R222 (see the receiver schematic diagram). The condensers C203-18 and C203-19 are blocking condensers.

The negative control grid bias of the vacuum tube is obtained from the self bias choke 201 wound from high resistance wire and across the great leak resistor R223.

The crystal oscillator anode circuit is tuned to the third or second harmonic (when receiving signals at frequencies from 119,5 to 120,5 Mc.) by adjusting for the maximum anode current of the frequency multiplior vacuum tube as read by the respective meter.

The frequency multiplier. The frequency multiplier (see fig. 3-6) uses a type 6 3 beam tetrode (R204) and a band pass filter in the anode circuit which triples the frequency.

A control grid of the vacuum tube is driven by the voltage obtained from the crystal oscillator.

The frequency multiplier anode and oscillating circuit consists of the coil L206, the variable condenser C216 and the trimmer condenser C215 which are tuned to the third harmonic of the anode current of the vacuum tube 204 and which cover the range from 44 to 69 Mc. This circuit is inductively coupled with a second circuit consisting of the coil L205 , the varable condenser C213 and the trimmer condenser C214 and it is tuned to the same frequency as the first circuit. Both circuit form a band pass filter attenuating the undesirable frequency combinations of the crystal and of the signal.

The third harmonic of the frequency multiplier vacuum tube anode current is the heterodyne frequency and is equal to the

SECRET
NO FOREIGN DISSEM
Declassified in Part - Sanitized Copy Approved for Release 2013/10/18 : CIA-RDP80T00246A071100330001-5

Declassified in Part - Sanitized Copy Approved for Release 2013/10/18 : CIA-RDP80T00246A071100330001-5
NO FOREIGN DISSEM

50X1-HUM

ninth (when receiving signals at frequencyies from 100 to 119,5 Mc. and from 120,5 to 160 Mc.) or the sixth (when receiving signals at frequencies from 119,5 to 120,5 Mc.) harmonic of the crystal.

Therefore we may write that :

$$\text{Het. } F = 9 \text{ Cryst. } F \qquad (3\text{-}4)$$

(when receiving signals at frequencies from 100 to 119,5 Mc. or from 120,5 to 150. Mc) and

$$\text{Het. } F = 6 \text{ Cryst. } F \qquad (3\text{-}4'')$$

(when receiving signals at frequencies from 119,5 to 120,5 Mc.), where 9 cryst. F and 6 cryst. F are the ninth and sixth harmonic of the crystal.

By substituting the equation (3-4') into the equation (3-3) we obtain

$$\text{Second IF} = \text{Sig. RF} \quad F - 18 \text{ Cryst. F.} \qquad (3\text{-}5)$$

from this we easily obtain the equation

$$\text{Cryst. } F = \frac{\text{Sig. } F - \text{second IF}}{18} \qquad (3\text{-}6)$$

By substituting into this equation the value of the second intermediate frequency (12 Mc.) we obtain the equation for determining the crystal frequency in relation to the frequency of the received signal (in case the latter is not in the frequency range from 119,5 to 120,5 Mc.):

$$\text{Cryst. } F = \frac{\text{Sig. } F - 12}{18} \quad \text{(Mc.)} \qquad (3\text{-}7')$$

Where crystal F and Sig. F are the crystal and signal frequencies in megacycles.

Analogically , by substituting the equation (3-4") into t the equation (3-3) and by simple rearrangement we obtain the equation for determining the crystal frequency in relation to the frequency of the received high signal (when the latter lies in the

SECRET
NO FOREIGN DISSEM
Declassified in Part - Sanitized Copy Approved for Release 2013/10/18 : CIA-RDP80T00246A071100330001-5

Declassified in Part - Sanitized Copy Approved for Release 2013/10/18 : CIA-RDP80T00246A071100330001-5
NO FOREIGN DISSEM

50X1-HUM

frequency range from 119.5 to 120,5 Mc.):

$$\text{Cryst. F} = \frac{\text{Sig. F} - 12}{12} \quad \text{(Mc.)} \qquad (3\text{-}7'')$$

where crystal F and sig. F are the crystal and signal frequencies in megacycles.

The second circuit ban pass filter heterodyne voltage is applied to the screen grid of the first mixer vacuum tube and it is also coupled by the coupling condensers C209 and C210 to tahe control grid of the second mixer vacuum tube. When the crystal oscillator voltage does not reach the frequency multiplier vacuum tube control grid(in case the crystal oscillator circuit is detuned) , this vacuum tube is blocked.

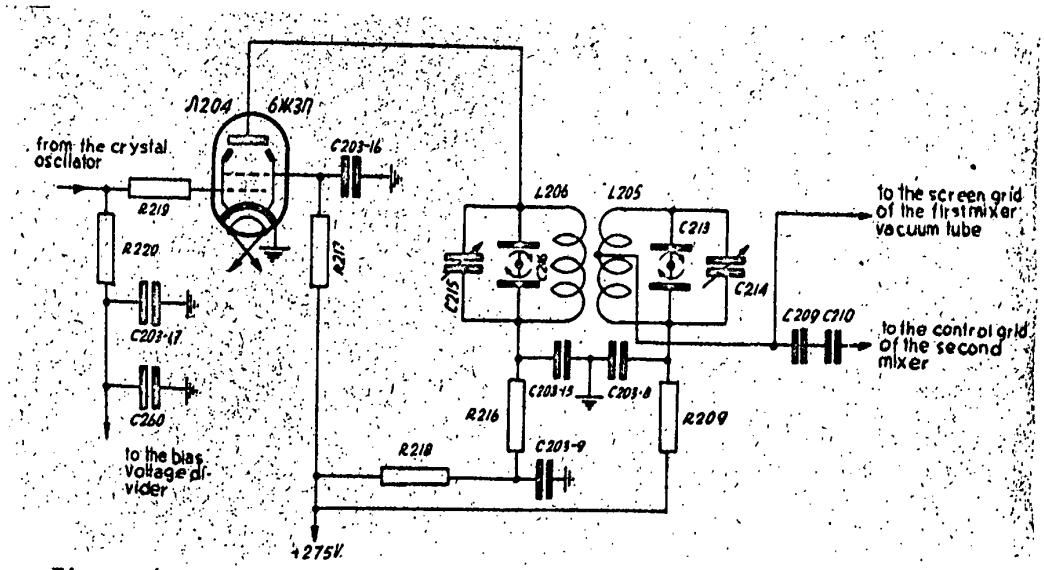

Fig. 3-6. The schematic diagram of the frequency multiplier.

The frequency multiplier vacuum tube anode voltage comes from contact 8 of the connector 202 across the shunting resistor R259, the shunting resistor R216 (for metering the frequency multiplier vacuum tube anode current), the decoupling resistor R216 and the coil L206; and the screen grid voltage comes from the same contact across the shunting resistor R259

SECRET
NO FOREIGN DISSEM
Declassified in Part - Sanitized Copy Approved for Release 2013/10/18 : CIA-RDP80T00246A071100330001-5

Declassified in Part - Sanitized Copy Approved for Release 2013/10/18 : CIA-RDP80T00246A071100330001-5
NO FOREIGN DISSEM

and the dropping resistor R217 (see the receiver circuit diagram)

The negative bias of the vacuum tube control grid is obtained from the bias voltage divider resistor R 277 across the grid leak resistor R220 and tahe anti parasite R219.

The tuning of the frequency multiplier band pass filter to the third harmonic frequency of the vacuum tube anode current is achieved by adjusting for a maximum voltage on the first oscillating circuit of the frequency multiplier band pass filter with the aid of the meter.

One of the diodes of the vacuum tube 213 is used as a tuning indicator diode detector (see the receiver schematic diagram) The voltage of the frequency multiplier band pass filter first circuit is coupled by the coupling condenser C266 to this detector. The resistor R270 and R231 from the detector load. The detected voltage across the resistor R271 is connected to the contact 5 of the connecter 201 to which the measuring instrument cable is connected.

2. The intermediate frequency amplification and detection.

The intermediate frequency amplifier (see fig. 3-7) consists of three stages. Each amplified stage is a band pass amplifier (in which the vacuum tube anode load is a double circuit band pass filter) and uses a type 6K4 pentode (206, 207, 208 - vacuum tubes of the first , second and third amplifier stages).

The second intermediate frequency voltage of the second intermediate frequency circuit filter -201 which is to be amplified to the control grid of the first intermediate frequency amplifier vacuum tube (206).

Declassified in Part - Sanitized Copy Approved for Release 2013/10/18 : CIA-RDP80T00246A071100330001-5

Declassified in Part - Sanitized Copy Approved for Release 2013/10/18 : CIA-RDP80T00246A071100330001-5
NO FOREIGN DISSEM

50X1-HUM

Each anode circuit of the intermediate frequency stages contains a band pass filter - an intermediate frequency filter (-202, 203, and -204 intermediate frequency filters corresponding to the first , second and third amplifier stages) Each intermediate frequency filter consists of two inductively coupled oscillating circuits tuned to the frequency of 12 Mc. (the second intermediate frequency). In each of the filter circuit are are ceramic condensers with a negative frequency coefficient - such condensers are used for frequency compensationof the circuit with a change in temperature of the ambient air. Thanks to this a relatively of the filter parameters is obtained.

The three intermediate frequency amplifiers ensurem a band width of at least 70 Kc. at a twofold attenuation or at ahundredfold attenuation a band width not broader than 300 Kc. Such values of band widths ensure a good selectivity of the main frequency channel.

The intermediate frequency amplifier supply voltages for the anode come from contact 6 of the connector 203 across the shunting resistor R239 and the protective resistor R229, and from there branches off across the decoupling resistor R227, and the coil L210 to the anode of the vacuum tube R206; across the decoupling resistors R239 and R242 and the coil L212 to the anode of the vacuum tube 207; across the decoupling resistors R254 and R246 and the coil L214 to the anode of the vacuum tube 208 (see the receiver schematic diagram). The supply voltage for the screen grid comes from contact 6 of the connector 202 across the shunting resistor R239 and the protective resistor R229 and from there branches out across the dropping resistor R228 R226 to the anode of the vacuum tube 206 . across the dropping resistor R230 to the anode of the vacuum tube 207,

SECRET
NO FOREIGN DISSEM
Declassified in Part - Sanitized Copy Approved for Release 2013/10/18 : CIA-RDP80T00246A071100330001-5

Declassified in Part - Sanitized Copy Approved for Release 2013/10/18 : CIA-RDP80T00246A071100330001-5
NO FOREIGN DISSEM

50X1-HUM

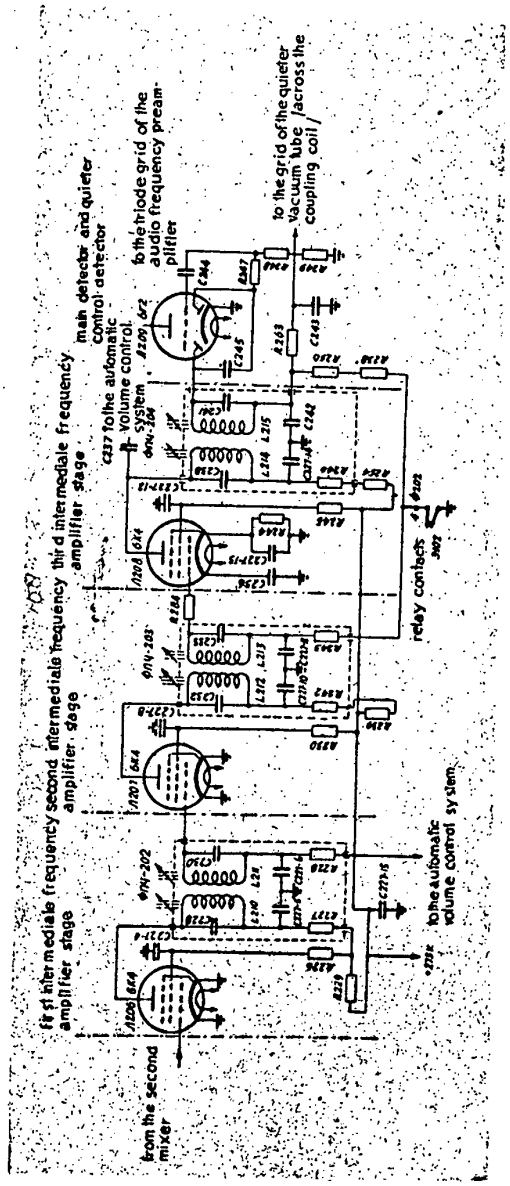
to the grid of the quieter vacuum tube /across the coupling coil/
to the triode grid of the audio frequency preamplifier
main detector and quieter control detector
C237 to the automatic volume control system
first intermediate frequency amplifier stage
second intermediate frequency amplifier stage
third intermediate frequency amplifier stage
relay contacts
to the automatic volume control system
from the second mixer

Fig. 3-7. Schematic diagram of the intermediate frequency amplifier the main detektor and the quieter control detektor.

Declassified in Part - Sanitized Copy Approved for Release 2013/10/18 : CIA-RDP80T00246A071100330001-5

Declassified in Part - Sanitized Copy Approved for Release 2013/10/18 : CIA-RDP80T00246A071100330001-5
NO FOREIGN DISSEM

50X1-HUM

across the dropping resistor of the anode of the vacuum tube 208

The negative bias for the control grids of the first and second intermediate frequency amplifier stage vacuum tubes is obtained from the automatic volume control system and the control grid of the third intermediate frequency amplifier stage vacuum tube negative bias is obtained from the self bias resistor R244 in the cathode circuit of this vacuum tube and across the decoupling resistor R243. The condenser C227-11 is an a blocking condenser.

The decoupling filters in the anode circuits of the second and third intermediate frequency amplifiers consists of one condenser and two series connected resistors. Each resistor has a value of 4,700 ohms with one of them rated ½W and the other one ½W

In case of a short circuit of the second and third intermediate frequency amplifier vacuum tube anode circuit to ground the resistor with the lower wattage rating burns out. These resistors are mounted in the receiver in such away that in case of necessity they may be easily replaced.

The resistor R229 serves the same purpose in the anode and screen grid circuits of the first intermediate frequency amplifier stage vacuum tube and int the second mixer vacuum tube circuit.

The voltage of the first circuit of the third intermidiate frequency amplifier stage band pass filter (-204) is coupled by the coupling condenser C230 to the detector system of the automatic volume control.

The voltage of the second circuit of the third intermediate frequency amplifier band pass filter (204) is applied to the anodes of the type 6 2 twin diode triode vacuum tube (209) see

SECRET
NO FOREIGN DISSEM
Declassified in Part - Sanitized Copy Approved for Release 2013/10/18 : CIA-RDP80T00246A071100330001-5

Declassified in Part - Sanitized Copy Approved for Release 2013/10/18 : CIA-RDP80T00246A071100330001-5
NO FOREIGN DISSEM

fig. 3-7) , one of which work as the detector of the main receiver frequency channek and the other one works as the detector which controls the quieter (this the detector is used for generating the negative bias for blocking the quieter oscillator)

The voltage is applied to the main channel ditector diode over tmhe blocking condenser C245 and to the quieter detector it is applied directly.

The audio frequency is generated after detection on the series connected resistors R247 , R248, and R249 a nd the portion across the resistors R247 , R248 , and R249 is coupled by a coupling condenser to the control grid of the preamplifier stage vacuum tube.

Both cothode leads of the type 6K4 vacuum tubes of all intermediate frequency amplifier stages are grounded for the high frequency in order to prevent the possibility of parasitic oscillation.

The potentiometer R240 in the control grid circuit of the vacuum tubes 201 , 202 , 206 and 207 (see the receiver schematic diagram) is used simultaneously for the menual sensitivity control and for the control of the quieter threshold.

The resistor R241 in the potentiometer circuit is used for the control of the initial sensitivity of the receiver.

3. Audio frequency amplification.

The audio frequency preamplifier. The audio frequency preamplifier stage (see fig. 3-8) is a resistance coupled stage using a type 6 2 twin-diode triode (JI209)

The audio frequency is applied to the triode grid of the vacuum tube 209.

The resistor R253 is the anode load. The amplified voltage is coupled from this resistor by the coupling condenser C247

SECRET
NO FOREIGN DISSEM
Declassified in Part - Sanitized Copy Approved for Release 2013/10/18 : CIA-RDP80T00246A071100330001-5

Declassified in Part - Sanitized Copy Approved for Release 2013/10/18 : CIA-RDP80T00246A071100330001-5
NO FOREIGN DISSEM

to the control grid of the audio frequency amplifier output stage type 6 6C beam tetrode (210).

The 209 vacuum tube anodesupply voltage is obtained from the contact 8 if the connector 202 across the shunting resistor R259 and the resistor R252. (see the receiver schematic diagram).

The necessary 209 vacuum tube grid bias is obtained from the resistor R260 of the bias voltage divider across the resistor R260 , the decoupling resistor R252 and the grid leak resistor R251 . The condenser C246 is a blocking condenser.

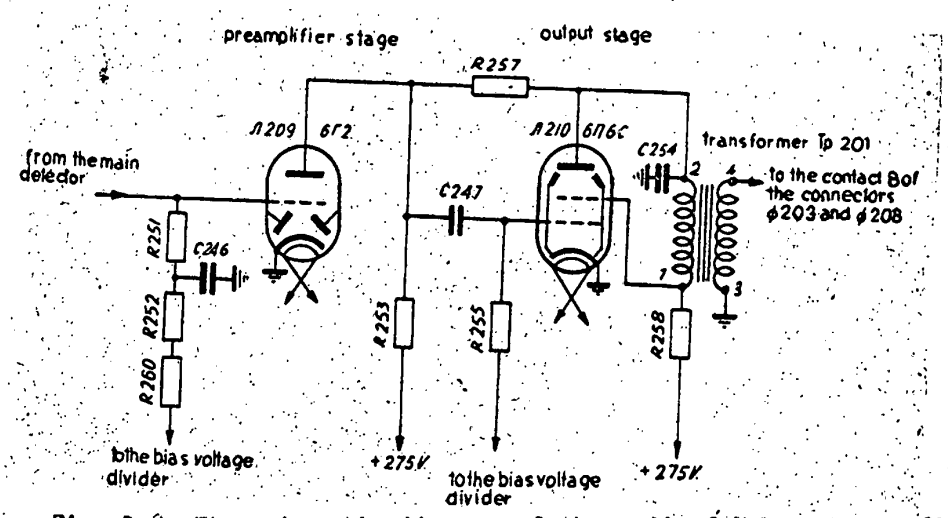

Fig. 3-8. The schematic diagram of the audio frequency amplifier.

The audio frequency output stage. The audio frequency output stage (see fig. 3-8) is a transformer coupled stage using a type 6 6C beam pentode vacuum tube (210).

The circuit consisting of the resistor R257 and the condenser C247 forms a negative voltage feedback.

The use of negative feedback ensures minimum frequency distortion in the output stage.

The 210 vacuum tube anode supply voltage is obtained from the contact 7 of the connector 202 across the shunting resistor R238 (for metering the total current of this vacuum tube) and

NO FOREIGN DISSEM
Declassified in Part - Sanitized Copy Approved for Release 2013/10/18 : CIA-RDP80T00246A071100330001-5

Declassified in Part - Sanitized Copy Approved for Release 2013/10/18 : CIA-RDP80T00246A071100330001-5
NO FOREIGN DISSEM

across the transformer Tp201 primary winding. The screen grid voltage is obtained from the same contact and across the resistor R258 (see the main circuit diagram).

The negative bias of the vacuum tube grid is obtained from the resistor R282 and R283 of the bias voltage divider across the grid leak resistowr R255.

The transformer output of the receiver is demensioned for connecting either one or two pairs of high resistance type TA-4 phones.

The fidelity charakteristic of the receiver is such that any frequency within the range from 300 to 3,000 ops. in relation to the frequency of maximum amplification is not attenuated more than twofold. The frequency of 10.000 ops.in relation to the frequency of maximum amplification is not attenuated more than threefold.

4. The automatic volume control.

The system of the delayed automatic volume control (see fig. 3-9) consists of a diode detector and a direct current amplifier.

The intermidiate frequency voltage of the third intermidiate frequency stage anode circuit is aplied to the automatic volume control detector. Diode ditection is used; the detector uses one of the diode of the type 6X6C twin-diode tricde vacuum tube (213). The detector load is former by the resistor R269,R232, and R274. The condensers C263 and C265 are blocing condensers and they are used for filtering the high frequency voltages.

The detected direct current voltage generated on the resistor R232 is applied across the resistors R269,R272 and R273 to the grid-to-cathode circuit of the direct current amplifier type 6 2 twin diode triode vacuum tube (211).

SECRET
NO FOREIGN DISSEM
Declassified in Part - Sanitized Copy Approved for Release 2013/10/18 : CIA-RDP80T00246A071100330001-5

Declassified in Part - Sanitized Copy Approved for Release 2013/10/18 : CIA-RDP80T00246A071100330001-5
NO FOREIGN DISSEM

50X1-HUM

voltage divider to the anode-to-grid circuit of this vacuum tube so that the negative end is at the cathode.

The "delayed" voltage of about 5 volts is applied to the grid of the 211 vacuum tube from the same bias voltage devider resistors R275 and R272 over the resistors R232 and R268 (the negative potential to the grid and the positive potential to the anode).

The anode load of the 211 vacuum tube consists of the resistors R265 and R267 connected to the manual sensitivity control potentiometer R240.

With an increase of the signal strength the voltage drop across the resistor R232 increases and the corresponding voltage value on the grid of the 211 vacuum tube increases (the negative bias decreases). The vacuum tube starts to pass current which result in a voltage drop across the resistors R265 and R267.

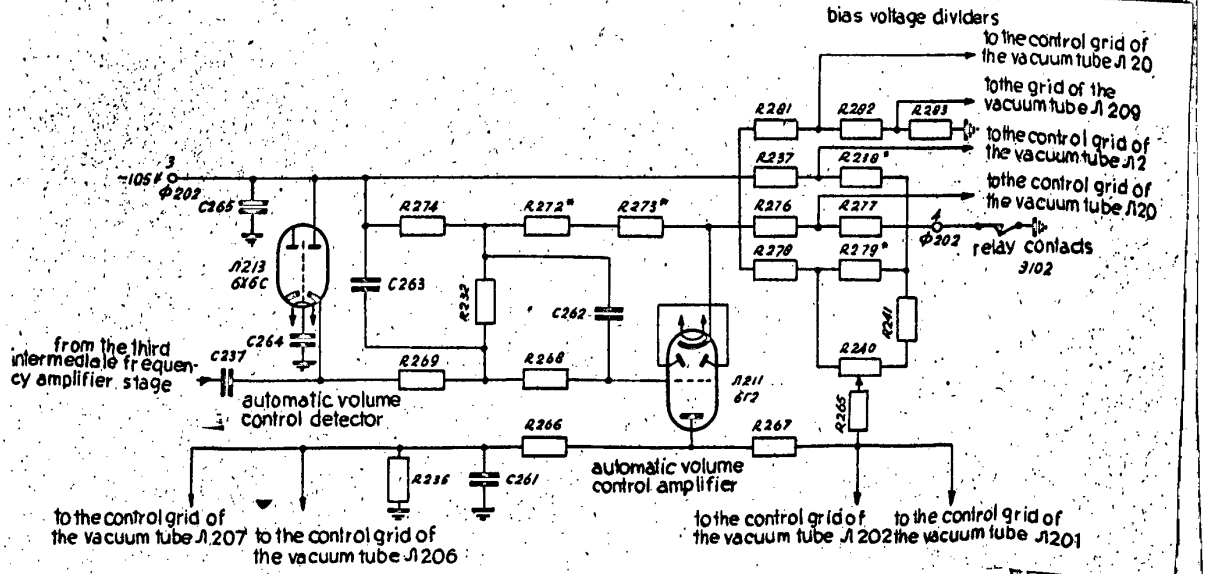

Fig. 3-9. The schematic diagram of the delayed automatic volume control.

The negative voltage obtained from these resistors is applied to the control grids of the controlled vacuum tubes: from the resistor R265 across the filter R210 , C203 and

SECRET
NO FOREIGN DISSEM
Declassified in Part - Sanitized Copy Approved for Release 2013/10/18 : CIA-RDP80T00246A071100330001-5

Declassified in Part - Sanitized Copy Approved for Release 2013/10/18 : CIA-RDP80T00246A071100330001-5
NO FOREIGN DISSEM

50X1-HUM

R202 to the grid of the high frequency amplifier vacuum tube and across the filter R207 , C203-6 and R206 to the first mixer vacuum tube grid ; from the resistor R267 across the filter R266 , C281 to the first and second aintermediate frequency amplifier vacuum tube grids (across the respective filters R225 , C227-2 and R228, C227-6).

With further increase of the signal voltage , the negative voltage on the control grid of the controlled vacuum tubes increases , the amplification of this vacuum tubes decreases and, as a result of this , the receiver output voltage remains almost unchanged even with a greater increas of the signal voltage at the receiver input.

During "reception" the junction of the receiver bias voltage divider resistors R227 , R279 and R238 is connected to the chassis over the contact 4 of the connector 202 and over the reception - transmission 102 relay contact 1 and 3 ; the receiver control grids receive the normal bias and the receiver is unblocked.

During "transmission" the junction of the receiver bias voltag ge divider resistors R277 , R 279 and R278 is disconnected from the entire negative bias connected to the voltage divider is applied (with the negative end) to the control grids of all controlled receiver vacuum tubes with the exception of the audio frequency amplifier vacuum tubes 209 and 210 - the receiver is blocked.

5. The quieting system.

The noise quieter (fig. 3-10) consists of a self-exited generator and diode detecter.

The quieting system is used for blecking the audio frequency preampifier stage vacuum tube and thus blocks the

SECRET
NO FOREIGN DISSEM
Declassified in Part - Sanitized Copy Approved for Release 2013/10/18 : CIA-RDP80T00246A071100330001-5

Declassified in Part - Sanitized Copy Approved for Release 2013/10/18 : CIA-RDP80T00246A071100330001-5
NO FOREIGN DISSEM

receiver. The receiver remains in this stage as long as the oscillator of the quieting system is operating.

The diode detector controlled by the quieting system is used for preventing the oscillator from oscillating. Not until the amplitude of the useful signal reaches a certain level is the oscillator stopped by this detector , the audio frequency preamplifier stage vacuum tube is unblocked and thereby the receiver is also unblocked.

The oscillator is self - exited and uses inductive coupling between anode and grid circuits , is series Fed and uses a twin diode triode type 6 2 vacuum tube (212).

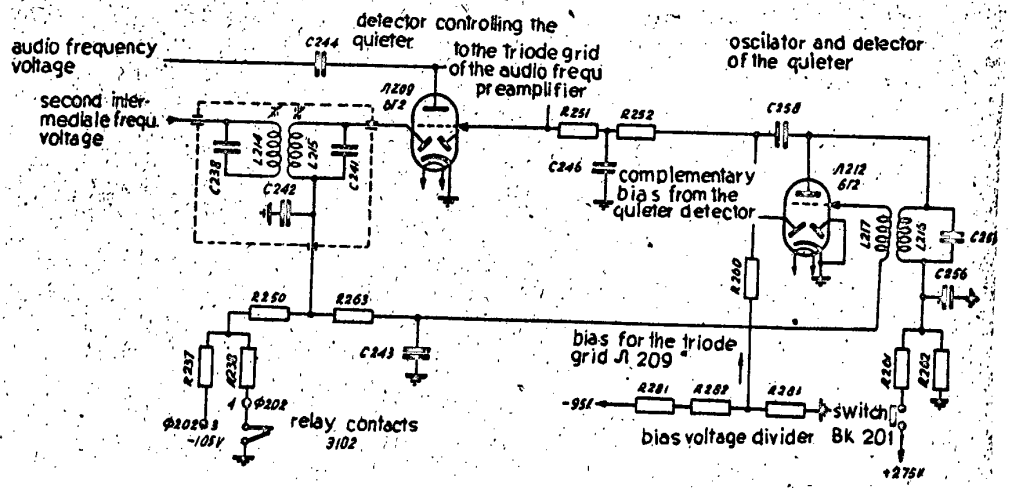

Fig. 3-10. The schematic diagram of the quieter and of the detector controlling it.

The oscillating circuit of the oscillator consists of the coil L216 and a fixed condenser C225. The feedback coil is L217.

The necessary vacuum tube 212 anode supply voltage comes from a voltage divider formed by the two resistors R261 and R262.

The voltage applied to this voltage divider comes from the contact 8 of the connector 202 over the shunting resistor R259 and the switch Bk201 (see the receiver schematic diagram). The condencer C256 is a blocking condenser.

SECRET
NO FOREIGN DISSEM
Declassified in Part - Sanitized Copy Approved for Release 2013/10/18 : CIA-RDP80T00246A071100330001-5

Declassified in Part - Sanitized Copy Approved for Release 2013/10/18 : CIA-RDP80T00246A071100330001-5
NO FOREIGN DISSEM

50X1-HUM

When no signal voltage is present on the receiver inpgt (with the quietingsystem turned on) , the quieting system oscillator voltage is coupled by the coupling condender C258 to the detector diode anode of the quietung system. The rectified negative voltage from the detector load R R260 and R283 is applied to the audio frequency amplifier stage vacuum tube grid over the decoupling filter R252 and C246 and the grid laek resistor R251 and blocks the receiver.

When a signal with a level greater tham the threshold of the quieting system (the threshold is adjustable by the manual sensitivity control R240) appeard , the generator is blocked in the following manner:

The second intermediate frequency voltage is applied to the diode detector controlling the quieting system. Thie detector works with the second diode of the 209 vacuum tube. The rctified voltage appearing across the resistors R250 and R238 is connected over the decoupling filter R263. C243 to the grid of the 212 quiting system vacuum tube. The oscillator ceases to operate and the 209 vacuum tube is unblocked and thereby the receivor is also unblocked.

Note. The detector controling the quieting system unblocks the receiver during the precence of the carier frequency of the other communocating station; individual disterbanches which usually are of hâgh antensity,will not unblock the receiver.

3-3. Receiver design features and assembly.

1. The general design of the receiver and its assembly.

The receiver block is formed by a welded steel frame to which the front panel and the chassis are attached.

On the front side of the panel are loc ted the following;

SECRET
NO FOREIGN DISSEM
Declassified in Part - Sanitized Copy Approved for Release 2013/10/18 : CIA-RDP80T00246A071100330001-5

Declassified in Part - Sanitized Copy Approved for Release 2013/10/18 : CIA-RDP80T00246A071100330001-5
NO FOREIGN DISSEM

the stepping relay with the selector switch , the crystal jacks, the crystal selector switch push-buttons, the cable and the feeder connectors , the sensitivity control, the quieting system, toggle switch, and the grounding binding posts (see fig. 3-11). The connector 204 is not used and it is covered.

The two tuning scales are graduated from 100 to 150 Mc. in 10 Mc. steps.

On the rear wall of the panel the condenser C268 is mounted this condenser blocks the coil of the stepping relay (see fig. 3-12).

The right hand side of the chassis has a large rectangular cut-out above which the high frequency block is fastened by screws to the chassis.

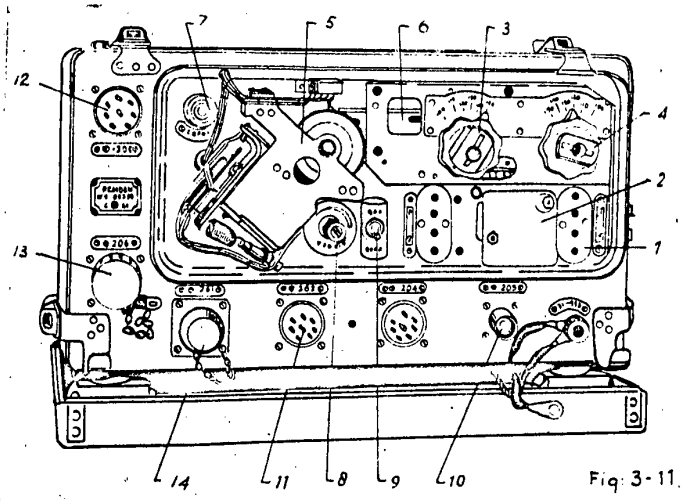

Fig. 3-11

Fig. 3-11. The type PC Y-3M receiver (general view with the cover removed):
1- crystal jacks; 2- communication channel selector switch (201); 3- tuning knob; ( ) ("crystal"); 4- tuning knob (" ") ("heterodyne"); 5-stepping relay with the selector switch; 6- levers; 7- pushbutton for the release of the levers (K201); 8 sensitivity control; 9- quieter switch (BK201); 10- antenna feeder connector (205); 11- supply connector ~~[illegible]~~ (202); 12- control connector (203); 13 measuring element (control) c connector (206); 14 measuring element (meter) connector (201).

SECRET
NO FOREIGN DISSEM
Declassified in Part - Sanitized Copy Approved for Release 2013/10/18 : CIA-RDP80T00246A071100330001-5

Declassified in Part - Sanitized Copy Approved for Release 2013/10/18 : CIA-RDP80T00246A071100330001-5
NO FOREIGN DISSEM

The first intermediate frequency stage vacuum tube 206 and the filter -201 are located on the rightt hand side in the rear part of the high frequency block on top.

On the left hand side of the chassis on top are the following elements;

- in the first row (from the front panel) from left to right: The condensers C256 and C243 and the quieter system vacuum tube 212;

- in the second row : the main detector , the quieting system control detector and the audio frequency preamplifier vacuum tube 209 , the filter -204, the third intermediate frequency amplifier vacuum tube 208 and the automatic volume control detector vacuum tube 213:

- in the third row : the condenser C245 , the audio frequency amplifier output vacuum tube 210 , the filter -203 and the automatic volume control amplifier vacuum tube 211:

- in the fourth row: The output transformer Tp201 , the condenser C254 , the second intermediate frequency amplifier vacuum tube 207 and the filter -202.

Under the left hand side of the chassis are the intermediate frequency amplifier and the audio frequency amplifier smaller components (see fig. 3-3). The greater part of the resistors and condensers are mounted on laminated phenilic sheet terminal strips.

To the right of the high voltage block mounted on a terminal strip are the small components of the detector and automatic volume control amplifier.

A terminal strip with the small components of the audio amplifier is mounted on the left wall of the chassis.

A terminal strip with the small components of the second intermediate frequency amplifier is mounted on the rear wall

Declassified in Part - Sanitized Copy Approved for Release 2013/10/18 : CIA-RDP80T00246A071100330001-5

Declassified in Part - Sanitized Copy Approved for Release 2013/10/18 : CIA-RDP80T00246A071100330001-5

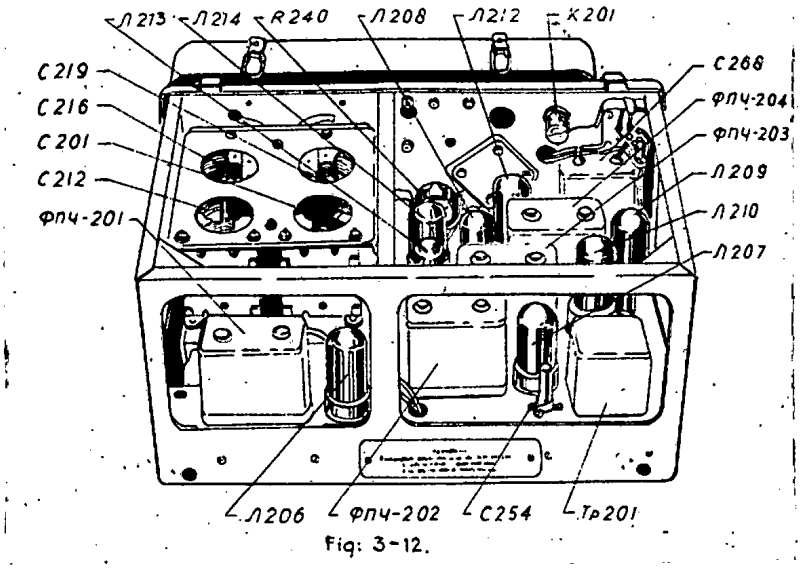

Fig. 3-12.

Fig. 3-12. The type PCMY-3M receiver (with the housing removed rear and top view of the chassis).

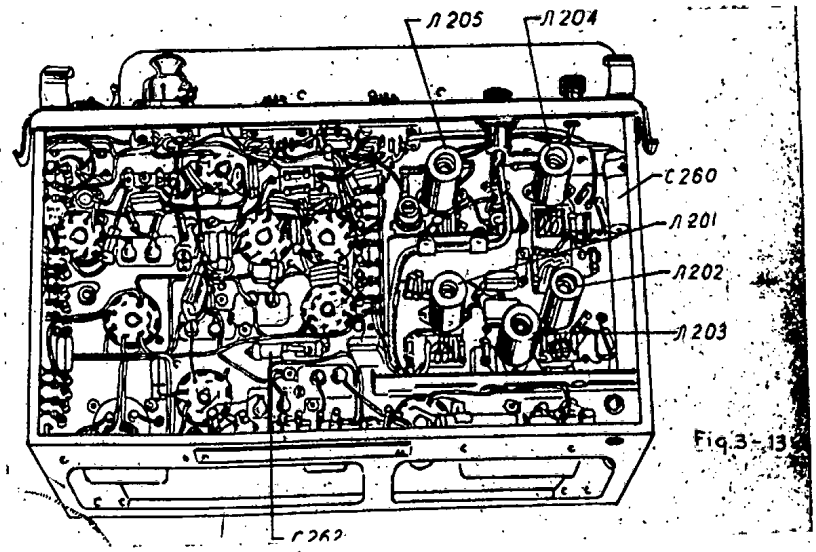

Fig. 3-13.

Fig. 3-13. The type PCMY-3M receiver (with the housing removed bottom view of the chassis).

of the chassis.

2. Design features and assembly of the high frequency section.

Declassified in Part - Sanitized Copy Approved for Release 2013/10/18 : CIA-RDP80T00246A071100330001-5

Declassified in Part - Sanitized Copy Approved for Release 2013/10/18 : CIA-RDP80T00246A071100330001-5
NO FOREIGN DISSEM

50X1-HUM

The radio frequency amplifier , the first and second mixers as wel as the crystal oscillator and the frequency multiplier of the heterodyne are assembled in a separate block called the high frequency block ; which is manufactured and adjusted separately.

The foundation of the high frequency block is a steel plate by which the block is attached to the frame of the receiver.

All details of the block are mounted on this plate and are below it , or as one might say , hanging from the block (see fig. 3-12 and 3-13).

Two variable condenser tuning blocks are mounted immediately below the foundation. The condenser shaft are coupled to the tuning knobs on the front side of the chassis by flexible couplings.

A steel plate (frame) is attached to the underside of the variable condensers. This plate is used as a mounting base for a laminated phenolic plate. All of the high frequency stage components are located on the laminated plate.

The high frequency circuit trimmer condensers are located in the space between the variable condensers and in the space between these condensers and the steel plate mounted on the underside with the steatite base of the trimmer condensers mounted directly on the variable condensers.

On the other side of the laminated plate the following components are located near the front panel; at left - the crystal oscillator vacuum tube 205 with the oscillating circuit coil L207 the choke p201 and the resistors of the anode, shield grid and control grid circuit : at right the frequency multyplier vacuum tube 204.

Behind these the following components are located: at left the radio frequency amplifier vacuum tube 201: at right the

SECRET
NO FOREIGN DISSEM
Declassified in Part - Sanitized Copy Approved for Release 2013/10/18 : CIA-RDP80T00246A071100330001-5

Declassified in Part - Sanitized Copy Approved for Release 2013/10/18 : CIA-RDP80T00246A071100330001-5
NO FOREIGN DISSEM

first mixer vacuum tube 202:in the center (somewhat to the rear) the second mixer vacuum tube 203.

Arounad each vacuum tube on the same laminated plate are the remaining smallcircuit components belonging to these stages. The vacuum tube and other small components of the crystal oscillator are seperated from the other stages by a shiled.

The high frequency block vacuum tubes are held in place by special spring loaded shields which protect the vacuum tubes from falling out of their sockets and protect them against impact.

The high frequency block is designed in such away as to enable th replacement of its components without disturbing the mechanical coupling of the variable condensers block to the automatic frequency tuning mechanism.

The high frequency feeder connecting the antenna connector to the input circuit in xxx and the shield separating to crystal oscillator from the other stages are designed for easy removal and, in case necessity , may be taken out of the unit.

3. Design of the intermediate frequency filters.

each intermediate frequency filter is designed as a separate unit.

The intermediate frequency filter has two coils with powdered iron ("Carbonile") cores; the coil form is molded of a special molding powder. The intermediate frequency filter is enclosed from the top by metal shielding attached to the body of the filter.

a shiled with a square cut-out in its center, which may be covered by a schutter, is located between the coils.

During the intermediate frequency tuning,the desired coupling between the two filter circuits,and thus the necessary bandwith, is adjusted by changing the position of the shutter with respect to the cut-out.

SECRET
NO FOREIGN DISSEM
Declassified in Part - Sanitized Copy Approved for Release 2013/10/18 : CIA-RDP80T00246A071100330001-5

Declassified in Part - Sanitized Copy Approved for Release 2013/10/18 : CIA-RDP80T00246A071100330001-5
NO FOREIGN DISSEM

The upper part of the shield cover has openings facing thecores into which a screwdriver may be inserted for tuning of the filter to the second intermediate frequency of 12Mc. After tuning the opening are soldered over.

The condensers and the higher wattage rating (2W) resistors of the second and third intermediate frequency amplifier anode circuit ~~the~~decoupling filters a mounted inside the intermediate frequency unit.

The resistors and the condensers of the intermediate frequency amplifier vacuum tube control grid circuit decoupling filters are mounted inside the intermediate frequency filter unit.

The complete sealing of the intermediate frequency filter precludes moisture effecting its parameters and there by its amplification (sensitivity) of the receiver.

Each filter has four leads with metal eyelets brought out through the ceramic insulators.

3-4. The measuring instrument.

1. Importance and application.

A special measuring apparatus , the measuring instrument (Block " ") is used for tuning of the PCMY -3M receiver and for testing the current and voltage of it main sections.

A D'Arsonval type MC 70 direct current milliameter 0 to 1 ma. with an internal resistance including the multiplier resistor R116 of 180 ohm,of an accuracy class 1,5 % is used as a tuning indicator or a current and voltage meter. The milliameter has two scales; one is callibrated in volts (0 to 50 volts) and the other one in milliamperes (0 to 10 ma.). The callabration accuracy is 5 %.

The measuring instrument is connected to the receiver by

SECRET
NO FOREIGN DISSEM
Declassified in Part - Sanitized Copy Approved for Release 2013/10/18 : CIA-RDP80T00246A071100330001-5

Declassified in Part - Sanitized Copy Approved for Release 2013/10/18 : CIA-RDP80T00246A071100330001-5
NO FOREIGN DISSEM

50X1-HUM

two multi conductor cables connected to the measuring instrument by the connectors 101-201 and 205.

The millimeter p601 is connected to the individual receivers circuit by means of a selector switch. This selector switch has 11 positions of which only 8 are used.

With the selector switch in the " " ("tube filament") position, the filament and stepping relay voltage are checked on the 50 V. scale.

With the selector switch in the " "("anode") position the anode and screen grid receiver supply voltage are checked on the 50 V scale , multiplied by 10.

With the selector switch in the " "("bias") position, the negative bias receiver supply voltage is checkedhe 50 V scale,multiplied by 5.

With the selector switch in the " "("total Current") position,the sum of the receiver anode and screen grid circuit current is checked on the 10 ma. scale, multiplied by 3.

With the selector switch in the " " ("receiver" crystal") position, the crystal oscillator is tuned for the third or second (during the reception of signals in the receiver range from 119,5 to 120,5 Mc.) harmonic of thecrystal by adjusting for the maximum needle deflextion of the meter. The meter readings are proportionate to the frequency multiplier anode circuit current.

With the selector switch in the "_____" (heterodyne") position , the frequency multiplier band pass filter oscillating circuit are tuned to the third harmonic frequency of its vacuum tube anode current by adjusting for the maximum meter needle deflextion. The meter readings are proportionate to the current in the special receiver diode detector circuit. This current is proportionate to the frequncy multiplier circuit voltage.

SECRET
NO FOREIGN DISSEM
Declassified in Part - Sanitized Copy Approved for Release 2013/10/18 : CIA-RDP80T00246A071100330001-5

Declassified in Part - Sanitized Copy Approved for Release 2013/10/18 : CIA-RDP80T00246A071100330001-5
NO FOREIGN DISSEM

50X1-HUM

With the selector switch in the "_____"("receiver output") position , the audio frequency output amplifier stagevacuum tube anode current is checked with the meter reading onm the 10 ma. scale , multiplied by three.

With the selector switch in the "_____" ("tester") position and the receiver energized , the instrument is converted into a sample ohmmeter with which the indivedual elements of the radio communication unit may be tested when locating faults.

The preclude damage to the instnument when it is used as simple ohmmeter , a special protective resistor is connected into its circuit.

Colored stripes are marked on the milliameter scale to indicate the permitted deviation of the measured voltage values. The red stripes indicate the permisible deviation of the anode and screen grid voltages,the green stripes indicate the permissible deviation of the bias voltage and the yellow stripes the deviation of the -26 V voltage. When checking the 26 V. bias and anode and screen voltages , the milliameter needle mi must be within the range of the colored ~~stripes~~ stripes. When checking the receiver operation , one must be guided only by the narrow colored stripes.

On the front panel of the measuring instrument are binding posts inscribed "50 V" and "500 V". These binding posts enable the use of the measuring instrument as a direct current voltmeter using the 50 V or the 500 V scales;in suhh a case it is necessary to discontact the cable with the 101 - 201 connector from the receiver. When this cable is connected to the energized receiver , it is possible to obtain 26 V and 276 V from the above mentioned binding posts.

SECRET
NO FOREIGN DISSEM
Declassified in Part - Sanitized Copy Approved for Release 2013/10/18 : CIA-RDP80T00246A071100330001-5

Declassified in Part - Sanitized Copy Approved for Release 2013/10/18 : CIA-RDP80T00246A071100330001-5
NO FOREIGN DISSEM

If necessary , it is possible to connect to the 50 V binding post the 26 V lamp which as a part of the radio communucation unit auxilliary aqqipment.

The four push-button selector switch KM601 enable switching of the commdnication channels directly from the measuring instrument.

2. The schematic diagram.

The schematic diagram of the measuring instrument is given by figure 3-14.

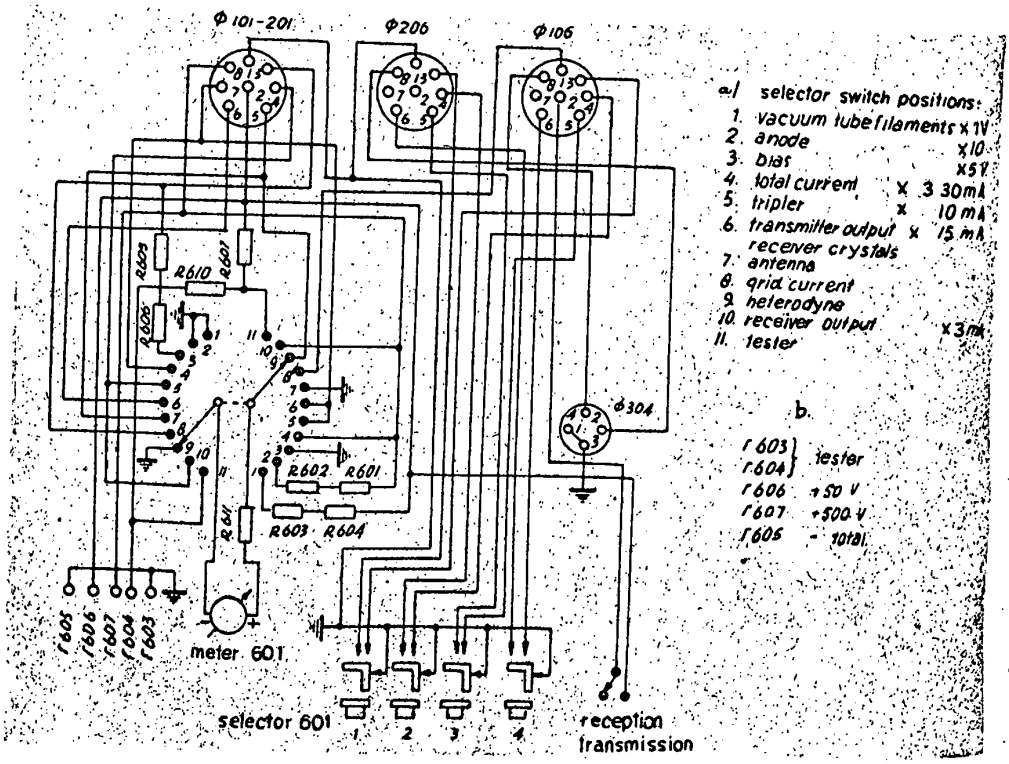

Fig.3-4 The schematic diagram of the measuring instrument.

The voltage and currents which are to be metered are connected to the measuring instrument by means of the cable with the connector 101 - 201.

The ⅋ Contact of the connecting plug 101-201 is connected to the instrument chassis and is used as the common negative

SECRET
NO FOREIGN DISSEM
Declassified in Part - Sanitized Copy Approved for Release 2013/10/18 : CIA-RDP80T00246A071100330001-5

Declassified in Part - Sanitized Copy Approved for Release 2013/10/18 : CIA-RDP80T00246A071100330001-5
NO FOREIGN DISSEM

50X1-HUM

lead for all voltage measured by the instrument

The contact 2 of the connector 101-201 is used for the 25 V. supply.

When the selector switch is in the "_____" ("tube filaments") position , the 26 V is led over the R611 resistor to the positive binding posts of the meter and the 1 contact of the left section of the selector switch(see the schematic diagram fig. 3-4) is connected to the chassis of the measuring instrument,so that the negative binding post is connected to the -26 V. The voltage 26 V is led over resistor R607 to the contact 11 of the "right" section of the selector switch.

Whrn the selector switch is in the "_____" ("tester") position , the 26 V is led over the dropping resistor R611 to the positive binding post of the meter. In this position of the selector switch the circuit is closed by connecting its left contact 11 to the binding post 604 - the negative binding post of the instrument - and by connecting the shunting resistor R610 in parallel to the meter. The binding post 604 when the enables to use the measuring instrument for testing purposes.

The bias voltage -105 V is connected to contact 3 of the connector 101-291 and from there is led across the dropping resistors R605 and R606 to contact 3 of the "left" selector switch section ; the 105 V bias voltage is connected to contact 1 of the 101-201 connector and is connected to the measuring instrument chassis through the contact 3 of the "right" selector swit

With the selector switch in the "_____" ("bias") position the -105 V is applied to the negative meter binding post and

SECRET
NO FOREIGN DISSEM
Declassified in Part - Sanitized Copy Approved for Release 2013/10/18 : CIA-RDP80T00246A071100330001-5

Declassified in Part - Sanitized Copy Approved for Release 2013/10/18 : CIA-RDP80T00246A071100330001-5
NO FOREIGN DISSEM

50X1-HUM

the 105 V is applied over the dropping resistor R611 to the positive binding post of the meter.

The anode and screen grid voltage 275 V is connected to tahe 8 contact of the 101-201 connector.

With the selector switch in the "_____" ("anode") position the 275 V is led over the droppingresistor R611 and over the contact 2 of the "right" section of the selector to switch to the positive binding post of the meter ; from the "left" section contact 2 of the selector switch which is connected to the cxxxix chassis of the measuring instriment , the -275 V screen grid and anode voltage is led to the nagative binding post of the measuring instrument.

The binding post 607 is used as a positive binding post when the instrument is uded as a direct current voltmeter with a range 0 to 500 V on the one hand , and as a 275 binding post on the other hand.

With the selector switch in the "_____" ("total current") position , the 275 V anode and screen grid voltage is led over the 4 contact of the "right" section of the selector switch and over the dropping resistor R611 to the positive binding post of the meter and flows through the meter , across the "4 contact of the "left" section of the selector switch to the 7 contact of the connector 101-201 and from there to the anodes of the xxxixxx receiver vacuum tubes. Inn this posoyion of the switch the meter is connected in parallel to the shunting resistor R259 in the receiver high voltage circuit and operates as a milliameter and measures the total anode and screen grid current of the vacuum tubes (se the receiver schematic diagram). With the selector switch in the "_____" ("receiver crystal) position , the instrument works as a milliameter and measures the frequency multiplier vacuum tube anode current.

SECRET
NO FOREIGN DISSEM
Declassified in Part - Sanitized Copy Approved for Release 2013/10/18 : CIA-RDP80T00246A071100330001-5

Declassified in Part - Sanitized Copy Approved for Release 2013/10/18 : CIA-RDP80T00246A071100330001-5
NO FOREIGN DISSEM

In this case a shunting resistor R218 is connected in parallel with this meter. This resistoar is a part of the anode circuit of the frequency multiplier vacuumtube.

With the selector switch in the "_____" ("heterodyne" position , the instrument is used as milliameter and its needle deflection is proportionate to the frequency multiplier oscillator circuit voltage. The current flows from the 5 Contact of the connector 101-201 across the 9 contact of the "right" section of the selector switch to the positive binding post of the meter,through the meter and aross the 9 contact of the "left" section of the selector switch to the chassis of the measuring instrument.

With the selector switch in the "_____" ("receiver output") position , the instrument is used as a milliameter and meters the audio frequency amplifier vacuum tube anode current. The current flows from the 8 contact of the 101-201 connector across the 10 contact of the "right" section of the selector switch , flows through the meter and across the 10 contact of the "left" section of the selector switch which is connected tothe 4 contact of the 101-201 connector and flows to the audio frequency amplifier vacuum tube anode and screen grid. In this case the shunting resister R258 , which is connected in the output stage vacuum tube anode circuit,is connected in parallelto the meter.

The connector 304 (" ")(helmetphone) and the toggle switch " " - " " ("receiver"- "transmitter" are not used.

3. Designe features.

The measuring instrument is a rectangular shaped cabinet with a lid and a leather carrying strap (handle) (see fig. 3-15

SECRET
NO FOREIGN DISSEM
Declassified in Part - Sanitized Copy Approved for Release 2013/10/18 : CIA-RDP80T00246A071100330001-5

Declassified in Part - Sanitized Copy Approved for Release 2013/10/18 : CIA-RDP80T00246A071100330001-5
NO FOREIGN DISSEM

50X1-HUM

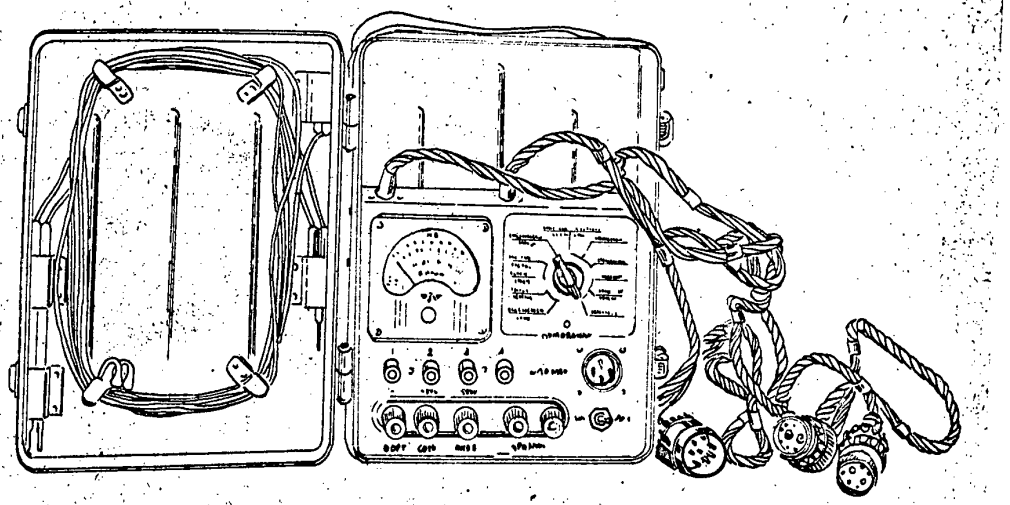

Fig. 3-15. Measuring instrument (general view with the cover open.)

SECRET
NO FOREIGN DISSEM
Declassified in Part - Sanitized Copy Approved for Release 2013/10/18 : CIA-RDP80T00246A071100330001-5

Declassified in Part - Sanitized Copy Approved for Release 2013/10/18 : CIA-RDP80T00246A071100330001-5
NO FOREIGN DISSEM

50X1-HUM

B. Receiving equipment.

3-5. Block diagram of the radio communication unit receiving equipment.

The radio communication unit has two radio reception unit (see fig. 3-16):

1. Receiver apparatus for main communication.
2. Receiver apparatus for auxilliary communication,

The main communication reception equipment consist of:

1. The PC Y-3M receiver (The main receiver).
2. The common control panel of both receivers (distribution panel).
3. The dynamic loudspeaker amplifier.
4. The supply panel for special apparatus.
5. Some circuits of the control control unit.
6. Some communicating line panel circuits, conductors for connecting the remote control unit and receiver circuits in the remote control unit.
7. Antenna equipment.
8. Spare parts.

The auxilliary communication reception equipment consists of:

1. The PC Y-3M receiver (the auxilliary receiver).
2. The auxilliary receiver control panel.
3. The common control panel of bith receivers (distribution panel).
4. Antenna equipment.
5. Spare parts.

The PC Y-3M receiver of both reception unit are alike and therefore they are interchangeable.

SECRET
NO FOREIGN DISSEM
Declassified in Part - Sanitized Copy Approved for Release 2013/10/18 : CIA-RDP80T00246A071100330001-5

Declassified in Part - Sanitized Copy Approved for Release 2013/10/18 : CIA-RDP80T00246A071100330001-5
NO FOREIGN DISSEM

50X1-HUM

There is one common control panel for both reception units. The measuring instrument ("block [illegible]") is used for tuning and current and voltage checking of the main circuits of the receiver and it is used alternatelyfor both receivers.

One and the same antenna feeder is used for the transmitter and for the main receiver.

The auxilliary receiver uses a special antenna permanently connected to it.

Reception of the main communication line is by headphones and over the dynamic loudspeaker.

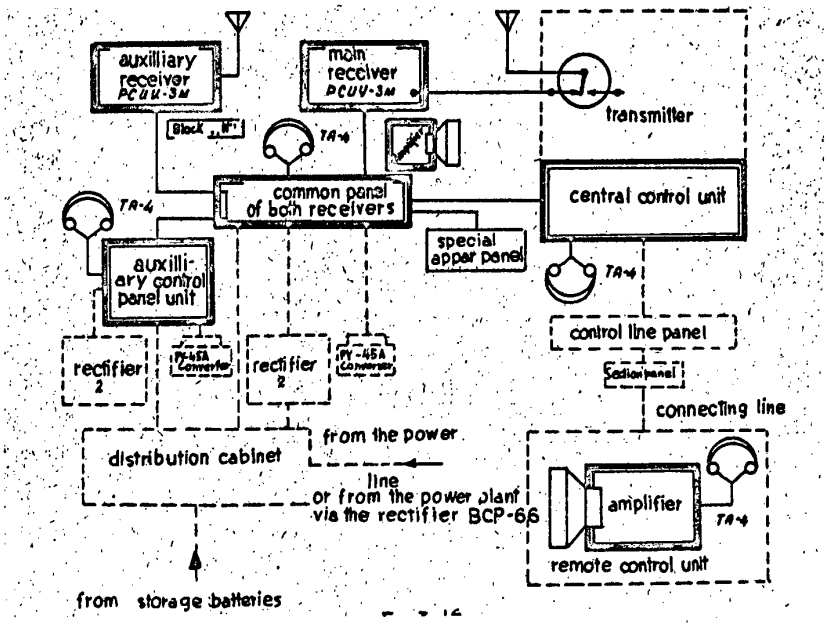

Fig. 3-16. Block diagram of the radio communication unit unit receiver equipment.

When controlling the radio communication unit from the remote control unit (B Y) , the main receiver output signal voltage is conducted over the connedting line wire to the remote control apparatus.

The headphones used in the radio reception equipment are of the TA 4 type with an impendance at 1000cps. equal to 600 ohms. The direct current resistance of each of the two phonereceivers is 65 ohms. The phone receivers are connected in series. They are connected to the apparatus by a plug:

SECRET
NO FOREIGN DISSEM
Declassified in Part - Sanitized Copy Approved for Release 2013/10/18 : CIA-RDP80T00246A071100330001-5

Declassified in Part - Sanitized Copy Approved for Release 2013/10/18 : CIA-RDP80T00246A071100330001-5

50X1-HUM

All receiver output loads (the headphones , the dynamic loud-speaker amplifier input and the connecting line)have an impendance of 800 ohms at a frequency of 1000cps. Thereforethe low impedance loads contain matching transformer to matchtheir low impedances to the high impedance of the receiver output.

The receiver may be powered by alternating current with the aid of the BG -2 rectifier,or by direct current from the storage batteries with the aid of the PY-45A converters and filters.

When it is necessary to remove the rectifier in order to power the remote control unit,then the BG -2 rectifier of the auxilliaryreceiver is used. In such a case it is possible to power the auxilliary receiver from the radio communication unit storage batteries.

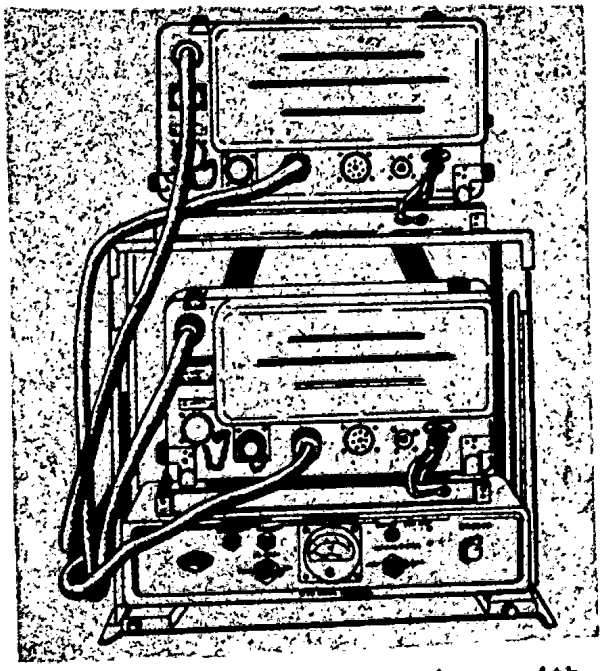

Fig. 3-17.The auxilliary (upper) and main receivers with their panel mounted in the frame.

The antenna equipment belonging to the reception equipment is described in chapter 4.

Declassified in Part - Sanitized Copy Approved for Release 2013/10/18 : CIA-RDP80T00246A071100330001-5

Declassified in Part - Sanitized Copy Approved for Release 2013/10/18 : CIA-RDP80T00246A071100330001-5
NO FOREIGN DISSEM

50X1-HUM

Fig. 3-17 shows the layout of the receiver (the main and auxilliary one) and the common control panel of both receivers mounted in a rack. The rack is located on the radio operators desk in the radio van.

3-6. Main communication reception equipment.

1. Importance and general information.

The main communication reception equipment is used for two way radio communication on when using the radio communication unit for simplex or mechanical duplex communication.

The switching of the antenna from the transmitter to the receiver is accomplished by a reception transmission relay vacuum switch located in the first section of the transmitter.

The main receiver output voltage may be connected to:

- the jack for listening to the main receiver (" ") ("main")(headphones) on the common panel of bath receiver , or
- the central control panel (Y) (over the transformer T703-1 in this common panel of both receiver).

The receiver output circuits are switched on the central control unit and the output voltage may be brought out to two receptacles ("T1" and "T_2") , to the " " ("helmetphones") connector on its panel, to the toggle switch on the receiver panel or to the input of the connecting line to the central control apparatus. The receiver ouput voltage is connected to the dynamic loudspeaker directly, or over the amplifier or over the transformer by means of the toggle switch on the common panel of bith receivers.

The volume control of the headphones connected to the receptacles ("T_1" and "T_2") or of the " "("helmetphones") connected to the connector on the central control panel is achieved by means of a variable resistor connected in series with the headphones.

SECRET
NO FOREIGN DISSEM
Declassified in Part - Sanitized Copy Approved for Release 2013/10/18 : CIA-RDP80T00246A071100330001-5

Declassified in Part - Sanitized Copy Approved for Release 2013/10/18 : CIA-RDP80T00246A071100330001-5
NO FOREIGN DISSEM

50X1-HUM

The volume of the headphones connected to the jacks of "T_2" of the central control panel,or to the jacks of the receiver panel cannot be controlled and remains at the level adjusted by the receiver sensitivity control. The signal of this level flows through the line. The volume of the dynamic loudspeaker is adjusted by the respective control of the amplifier panel.

The loudspeaker may be disconnected if necessary.

During transmission the receiver is blocked by a large negative bias applied to the control grids of its vacuum tubes.

This is achieved by means of the reception - transmission relay which is controlled by the pus-button on the microphonehandle or by a transfor switch when operating from the central control apparatus.

The selection or switching of the receiver communication channels is performed simultaneously with the selection and switching of the transmitter communication channels. The channels are switched from the central control unit by simply pressing the respective channel push-button.

The switching of the receiver apparatus supply source is performed according to the kind of power available (alternating current of direct current) by the respective slector switch on the common panel of both receivers (on the front panel). The anode , screen grid and filament voltages of the vacuum tubes are checked by the voltmeter built into the same panel.

2. The common panel of both receiver.

The schematic diagram. The common panel of both receiver is a unit by which the following units are coupled together (see the radio van connection sehematic diagram in the appendix)

1. The receiver , the dynamic loudspeaker amplifier.
main

SECRET
NO FOREIGN DISSEM
Declassified in Part - Sanitized Copy Approved for Release 2013/10/18 : CIA-RDP80T00246A071100330001-5

Declassified in Part - Sanitized Copy Approved for Release 2013/10/18 : CIA-RDP80T00246A071100330001-5
NO FOREIGN DISSEM

50X1-HUM

The central control unit and the main receiver and amplifier power supplies.

2. The auxilliary amplifier and its control panel.

From the common panel of both receivers lead four cables (see the connection panel for both receivers schematic diagram in the appendix) ; 2 to the main receiver , and 2 to the auxilliary receiver. The cables brought to the panel are attached with a 10 contact female connector("1", "2" , "3" , "5" and "7") , a twin jack (") and a triple-jack ("8").

The supply sources are connected to the receiver and the dynamic loudspeaker amplifier by means of the selector switch 701. The toggle switch 02-1 is used for turning on the receiver.

The volymeter 701 together with the multiplier resistor R702 , the toggle switch 702 and the momentary contact push-button 703 are used for checking the anode current, as well as the screen grid and the filament voltages of the receiver vacuumtubes. The voltmeter has two scales: 0 to 30 volt and 0 to 300 volt. It is permanently connected to the vacuum tube filaments of one or the other receiver. When measuring the anode and the screen grid current the momentary contact push-button 703 must be depressed.

The transformers T703 and T703-1 are used for matching the high impedance outputs to the low impedance loads (the headphones the amplifier input , the teletype apparatus and the connecting line). The transformer T703 is connected in the auxilliary receiver circuit and the transformer T703-1 in the main receiver circuit.

The coils and the condensers L701-1,C701-1, and L701-2, C701-2 make up the low freqyuency type T/2 filters in the negative bias (-105 V) circuits of both the main and the auxilliary receivers.

SECRET
NO FOREIGN DISSEM
Declassified in Part - Sanitized Copy Approved for Release 2013/10/18 : CIA-RDP80T00246A071100330001-5

Declassified in Part - Sanitized Copy Approved for Release 2013/10/18 : CIA-RDP80T00246A071100330001-5
NO FOREIGN DISSEM

50X1-HUM

The headphones are plugged into the jacks J04-1 and J04-2 for listening to both the main as well as the auxilliary receivers.

The dropping resistor R704 is connected in the anode voltage supply circuit of the main receiver and of the dynamic loudspeaker amplifier , when these are supplied from the BCA-2 rectifier. Two additional resistors R705 and R703-1 are connected in the amplifier anode circuit.

The series connected resistors R705-4 , R705-5 , R705-6 in the main receiver anode circuit and the series connected resistors R705-1 , R705-2 , R705-3 in the auxilliary receiver anode circuit are bleeder resistors.They are necessary for matching out the receiver supply voltages obtained from the rectifiers or from the converters. The variation of these voltages , without the resistors is determined by the turning on and off the dynamic loudspeaker ampli

The 0.25 amp. fuse R701-1 protects the anode voltage supply against short-circuiting current. The converter PZ-45A is started by means of the relay 701-1. The resistor R701-1 is a complimentary resistor in the converter circuit.

Design features. The receiver panel is designed in the form of a low rectangular cabinet with all components mounted on its bottom,front and rear walls (see figures 3-16 and 3-19).

The receiver cables , all connectors , the twin jacks and the triple jacks are mounted on the rear wall of the chassis.

The front panel contains : the voltmeter , the supply selector switch , two toggle switches , a momentary contact push-button two phone jacks and a fuse.

The wiring uses a harness cable.

All components bear designation corresponding to the numbers used in the common panel of both receivers schematic diagram.

SECRET
NO FOREIGN DISSEM
Declassified in Part - Sanitized Copy Approved for Release 2013/10/18 : CIA-RDP80T00246A071100330001-5

Declassified in Part - Sanitized Copy Approved for Release 2013/10/18 : CIA-RDP80T00246A071100330001-5

50X1-HUM

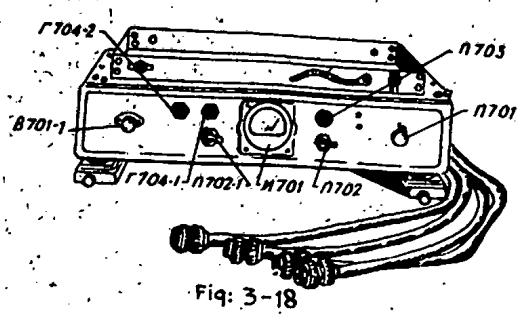

Fig: 3-18

Fig. 3-18. The common panel of both receivers (general view).

Informative inscription are engraved on the front panel above the toggle switches , knobs , the voltmeter and the jacks.

On the rear panel above the connectors and the connecting cables are designation which agree with the numbers used for these items in the schematic diagrams. The connector at the anode of the connecting cables are also marked with the respective designatio.

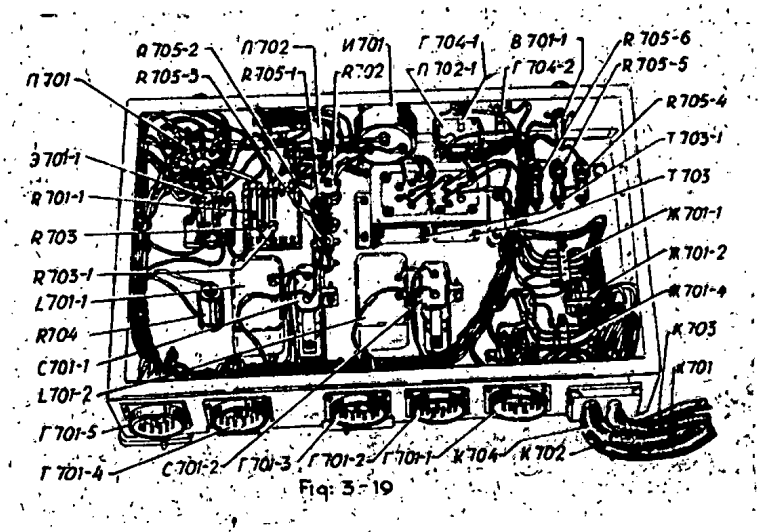

Fig: 3-19

Fig. 3-19. The common panel of both receivers (rear top view with the cover removed).

The top of the chassis is covered with a screwed on screen cover to which the frame of the main receiver is attached. The chassis rests on six resillient mounts which are fastened in groups of three to two straps on the left and right hand sides. The straps are used for locating the panel in the receiver frame

Declassified in Part - Sanitized Copy Approved for Release 2013/10/18 : CIA-RDP80T00246A071100330001-5

Declassified in Part - Sanitized Copy Approved for Release 2013/10/18 : CIA-RDP80T00246A071100330001-5
NO FOREIGN DISSEM

50X1-HUM

on the radio operator desk.

1. The dynamic loudspeaker amplifier.

The amplifier is used for amplefying the audio frequency applied to its input to a v alue necessary for driving the loudspeaker . The input voltage comes from the main receiver output over the matching transformer T703-1 which is located in the common panel of both receivers.

The schematic diagram. The amplifier (see fig. 3-20) is a single stage push-pull audio frequency power amplifier and used a type 6N60 twin triode vacuum tube (702).

The power delivered by the amplifier to the voice coil of the dynamic loudspeaker is greater than 100 milliwatts. The volume control is accomplished by means of the potentiometer R709.

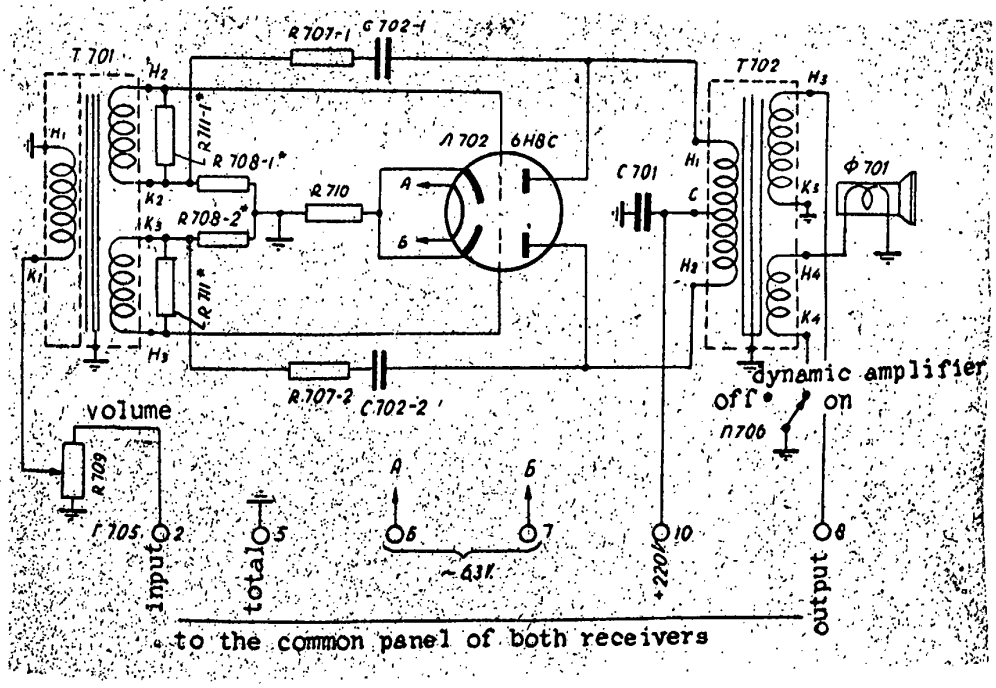

Fig. 3-20. Schematic diagram of the dynamic loudspeaker amplifier.

In each branch of the amplifier are negative feedback

SECRET
NO FOREIGN DISSEM
Declassified in Part - Sanitized Copy Approved for Release 2013/10/18 : CIA-RDP80T00246A071100330001-5

SECRET
Declassified in Part - Sanitized Copy Approved for Release 2013/10/18 : CIA-RDP80T00246A071100330001-5

50X1-HUM

circuit consisting of a series connected blocking condenser and two resistors (in one amplifier branch the condenser C702-1 and the resistors R707-1 and R708-1 , in the other amplifier branch the connector C702-2 and the resistor R707-2 and R708-2). The negative feedback voltage apllied to the grids of the triodes comes from the resistor R708-1 and R708-2 . The dynamic loudspeaker is turned on and off by means of the selector switch R706.The amplifier requires for its operation 6,3 V filament voltage and a 220 V anode voltage

Design features. The amplifier is built on a metal chassis attached to the front panel which also contains the dynamic loudspeaker. On the front side of the panel are the on-off and the volume control knobs. Above the volume control knob is a name plate with the inscription " " ("volume") and a sign indicating the lowered and raised volume. Above the oyher knob is a name plate with the inscription " " ("loudspeaker"), " "(" ") and " "("off") (see fig. 3-21).

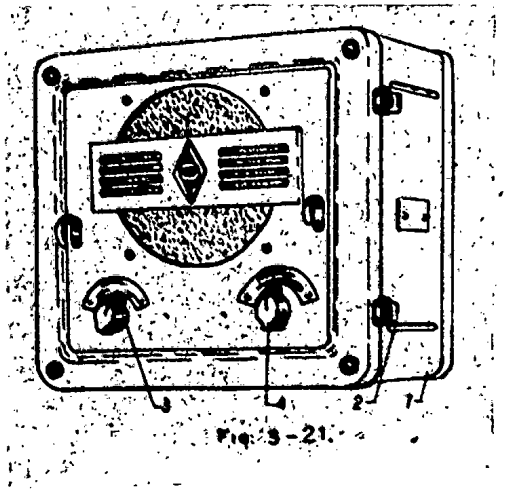

Fig. 3-21.

Fig. 3-21. The dynamic loudspeaker amplifier (general view)

1- housing;2- spring lock;3- knob for turning on the dynamic loudspeaker (706);4- volumecontrol knob (R709).

The assembled amplifier is mounted in a metal housing which is factened to the front panel by means of spring locks. On the

SECRET
Declassified in Part - Sanitized Copy Approved for Release 2013/10/18 : CIA-RDP80T00246A071100330001-5

Declassified in Part - Sanitized Copy Approved for Release 2013/10/18 : CIA-RDP80T00246A071100330001-5
NO FOREIGN DISSEM

50X1-HUM

rear wall of the housing are special "ears" by which the amplifier is mounted on the front wall inside the radio van.

4. Output circuits of the main receiver.

The schematic diagram of the main receiver output circuits is given byfigure 3-22.

The schematic diagram shows the details of the connecting line reception equipments which are electrically connected to the receiver output.

The receiver output voltage is led to the common panel of both receivers matching transformer T703-1 winding II-2 K-2,

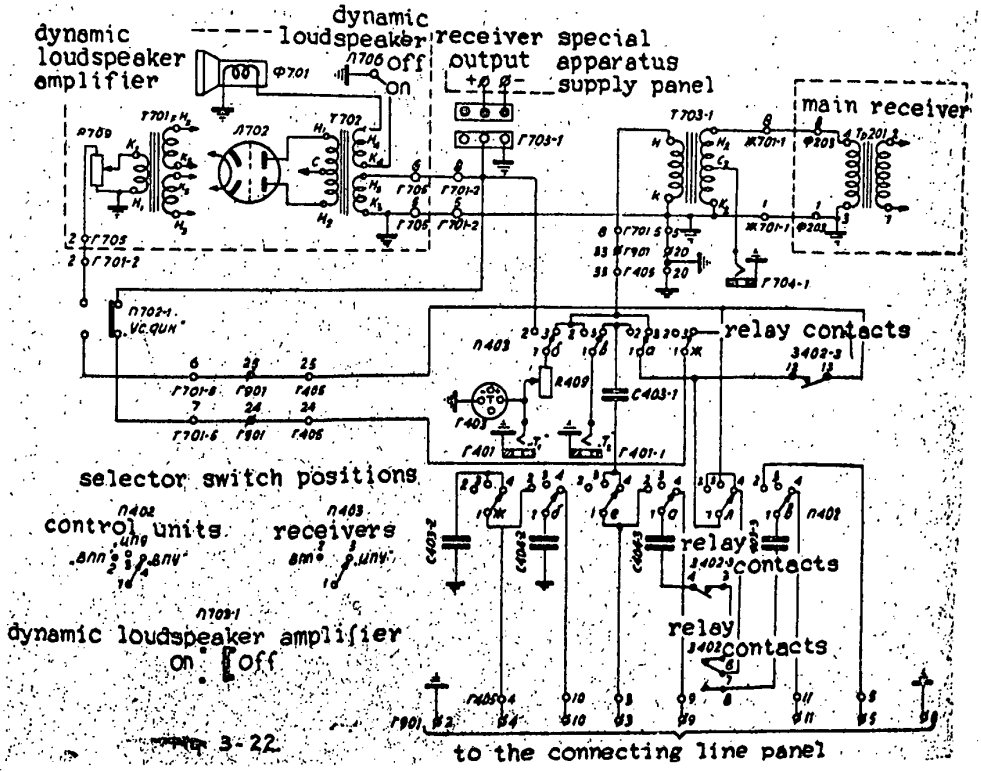

Fig. 3-22

Fig. 3-22. Schematic diagram of the main receiver output circuits.

The voltage from the center tap of this winding is led

SECRET
NO FOREIGN DISSEM
Declassified in Part - Sanitized Copy Approved for Release 2013/10/18 : CIA-RDP80T00246A071100330001-5

Declassified in Part - Sanitized Copy Approved for Release 2013/10/18 : CIA-RDP80T00246A071100330001-5
NO FOREIGN DISSEM

50X1-HUM

to the jack 704-1 into which the headphones are plugged.

The voltage from the winding HK is led to the central control unit selector switch 403 decks a,G , and ,

The selector switch 403 is used for switching the circuits of the receivers only in case when when the porttable complementary apparatus is connected to the radio communication unit. The jack "T_2" in the central control unit is also used only in case when the portable complimentary apparatus is connected to the radio Communication unit.

The voltage is led across the selector switch 403 deck a contacts 3-1 and over the adjustable resistor (volume control) R409 to the jack 407 ("T_2") and to the connector 403 (" ") ("helmetphones").

The voltage is led across the selector switch 403 deck a contacts 3-1 to the common control panel of both receivers selector switch 402 and to the contact 12 of the line relay 402-3.

The selector switch 402 has only two position. " " ("central control unit") and " "("remote control unit"). On the schematic diagram the selector switch 402 is shown in the "B Y" ("remote control unit") position.

With the selector switch 402 in the "___" position, the receiver output voltage is led across the contacts 1-3 of its deck (as wall as over the normaly closed line relay 402-3 contacts 12-13 - these contacts remain closed during reception with semi duplex communication) , over the contacts 25 of the terminal board 405 , the contacts 25 of the terminal board 901 and the contacts 6 of the connector 701-5 to the toggle switch 702-1 in the common panel of both receivers. The receiver output voltage is also led to the same toggle switch across the selector switch 403 deck contacts 3-1 , the conyacts 24 of the terminal board 403 , the contacts 24 of the terminal board

NO FOREIGN DISSEM
Declassified in Part - Sanitized Copy Approved for Release 2013/10/18 : CIA-RDP80T00246A071100330001-5

Declassified in Part - Sanitized Copy Approved for Release 2013/10/18 : CIA-RDP80T00246A071100330001-5
NO FOREIGN DISSEM

50X1-HUM

901 and the contact 7 of the connector 701-5.

The toggle switch 702-1 is used for turning the dynamic loudspeaker amplifier on and off. With the amplifier turned on, the receiver output voltage is led across the contacts 2 of the connectors 701-2 and 705 to the variable resistor (volume control) R709 to the amplifier input. With the amplifier turned off the receiver output voltage is led across the contacts 8 of the connectors 701-2 and 705 to the amplifier output transformer 702 secondary winding H_3K_3.

The amplifier is disconnected (by diconnecting the lilament voltage of its vacuum tube) then,when the receiver output voltage is sufficiently strong for driving the loudspeaker without the used of the amplifier.

With the selector switch 4)2 in the "B Y" ("remote control unit")(as shown in the schematic diagram) the receiver output voltage is led to the input of the connecting line panel across the deck contacts 1-4 of this selector switch, the contacts 7-6 of the duplex relay 402 , the relay 402-3 contacts 3-4 , the condensers C404-3 and the deck contacts 1-4 of the same selector switch and from there to the input of the c connecting line to the remote control unit B Y.

Beside this , the receiver output voltage may be led over the relay 402-3 contacts 12-13 and farther on across the circuits listed above the either the input or the output of the dynamic loudspeaker amplifier (depending on the position of the selector switch 702-1).

For better understanding of the switching of the central control circuits of the main receiver output refer to table 3-1.

SECRET
NO FOREIGN DISSEM
Declassified in Part - Sanitized Copy Approved for Release 2013/10/18 : CIA-RDP80T00246A071100330001-5

Declassified in Part - Sanitized Copy Approved for Release 2013/10/18 : CIA-RDP80T00246A071100330001-5
NO FOREIGN DISSEM

50X1-HUM

Table 3-1.

Position of the receiver selector switch (403)	position of the central control selector switch (402)	The following are connected to the output of the receiver:
" "("central control unit")	" "("central control unit")	1/ The telephone jack "T_1" and the helmet-phone connector. 2. The dynamic loudspeaker via the amplifier or via the transformer T702.
	" "("remote	1. The telephone jack "T_1" and the helmet-phones connector. 2. The dynamic loudspeaker via the amplifier or via the transformer T702. 3. The line connecting the " " ("remote control unit") to the " " ("central control unit") (via the connecting line panel.

3-7. The receiving equipment of the complimentary (auxilliary) communication connecting line.

1. General

The auxilliary receiver operates independently of the transmitter and of the main receiver communication line.

The output of the receiver is led to the auxilliary receiver listening jacks on the same panel and to two phone jacks on the auxilliary receiver control panel via the matching transformer T703 in the common panel of both receivers.

The signal volume level in the headphones plugged into the jacks of the common panel of both receiver cannot be controlled and the volume remains at the level adjucted by the receiver sensitivity control.

NO FOREIGN DISSEM
Declassified in Part - Sanitized Copy Approved for Release 2013/10/18 : CIA-RDP80T00246A071100330001-5

Declassified in Part - Sanitized Copy Approved for Release 2013/10/18 : CIA-RDP80T00246A071100330001-5
NO FOREIGN DISSEM

The adjustment of the necessary signal volume level in the headphones plugged into the jacks of the auxilliary receiver control panel is performed by means of a potentiometer . On the panel above the potentiometer knob is the inscription " "("volume") and a sign indicating the lowered and raised volume.

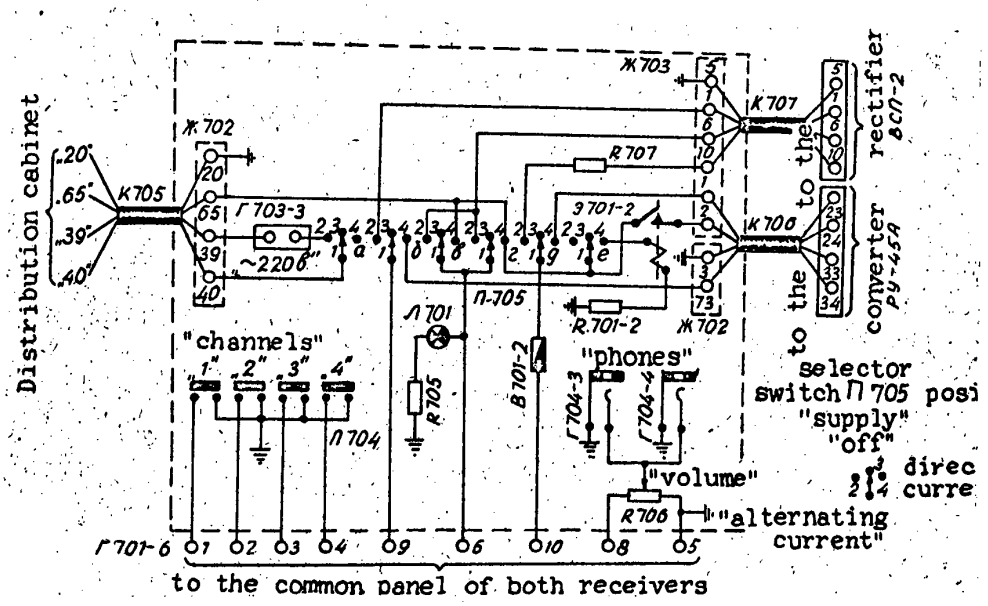

Fig. 3-23. Schematic diagram of the auxilliary receiver for controlling the mobile radio communication unit.

The selection of the auxilliary receiver communication channels is performed from this receiver's control panel by merely pressing the push-button selector switch button of the respective channel.

The receiver supply circuits are switched from alternating current to direct current (depending on which primary power source is avilable) by means of the appropriate selector switch on the auxilliary receiver panel. The receiver vacuum tube anode , screen grid and filament voltages are checked with the voltmeter which is built into the common panel of both receivers.

NO FOREIGN DISSEM
Declassified in Part - Sanitized Copy Approved for Release 2013/10/18 : CIA-RDP80T00246A071100330001-5

Declassified in Part - Sanitized Copy Approved for Release 2013/10/18 : CIA-RDP80T00246A071100330001-5
NO FOREIGN DISSEM

2. The auxilliary receiver control unit.

The schematic diagram. The auxilliary receiver control unit enables one to:

1. Switch the receiver supply circuits according to the primary power available (alternating current or direct current).

2. Select any of the four pretuned and fixed receiver communication channels.

3. Connect one or two sets of headphones to the receiver output and to control their volume.The schematic diagram of the auxilliary mobile receiver radio communication unit receiver control unit is given by figure 3-23.

Three cables lead from the unit : to the distribution cabinet , to the converter PY-45A and to the rectifier BCH-2

The cable coming from the common panel of both receivers is connected to the 10 -contact connector 701-6.

A twin conductor cable fromthe rectifier BCH-2 is plugged into the twin jack P703-3.

The receiver supply power is connected by means of the selector switch 705. The relay 701 is used for starting the converted PY-45A and the resistor R701-2 is a complementary resistor of this circuit.

When the recdiver is powered from the BCH-2 rectifier , tmhe dropping resistor R707 is connected into the receiver anode circuit and the 0,25 amp. fuse B701-2 is also connected in this circuit to protect the anode supply source against short circuits.

The pilot lamp 701 signals the connecting of the supply source: the resistor R705 in the circuit is a dropping resistor.

The signal volume in the headphones plugged into the

Declassified in Part - Sanitized Copy Approved for Release 2013/10/18 : CIA-RDP80T00246A071100330001-5

Declassified in Part - Sanitized Copy Approved for Release 2013/10/18 : CIA-RDP80T00246A071100330001-5
NO FOREIGN DISSEM

50X1-HUM

jacks 704-3 and 704-4 is controlled by means of the potentiometer R706.

The selection of the desired communication channel is accomplished by the four-push-button selector switch 704.

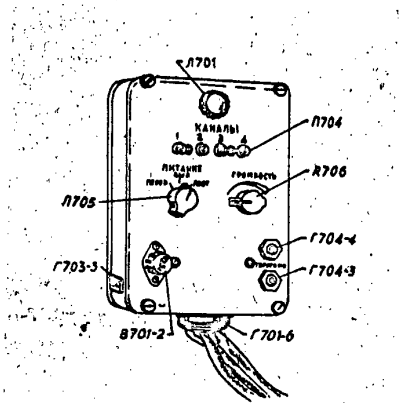

Fig. 3-24. Auxilliary receiver control panel general view).

Design features. The control unit is designed in the form of a rectangalar cabine with all of the components mounted on its front panel , right , left , and rear walls (see Fig. 2-24).

NO FOREIGN DISSEM
Declassified in Part - Sanitized Copy Approved for Release 2013/10/18 : CIA-RDP80T00246A071100330001-5

Declassified in Part - Sanitized Copy Approved for Release 2013/10/18 : CIA-RDP80T00246A071100330001-5
NO FOREIGN DISSEM

50X1-HUM

CHAPTER 4

The antenna feeder equipment.

The telescopic tower.

4-1 general.

The antenna-feeder equipment is used for the transmission of the electromagnetic energy , generated by the transmitter , to the antenna and for its radiation into the atmosphere as well as for reception of electrpmagnetic energy from the atmosphere and its conduction to the receiver apparatus.

The antenna-feeder equipment of the type PAC-YKB radio communication on uhit consists of the antenna , high frequency feeders and matching and compensating circuits.

For air plaine and ground communication the radio communicationunit is eqwipped with three types of antenna: the all-directional antenna for the main communication (cone and disk type) , the directional antenna for the main communication, and the all-directional antenna for the auxilliary receiver.

For most efficient radio communication unit operation the directional or all-directional main communication antenna is mounted 16,5 meters above ground (with the tower fastened to the radio van) or 16 meters (with the tower standing on a supporting platform on the ground) above ground. A set of guy cables belongs to the tower.

The all-directional auxilliary receiver antenna is mounted on the roof of the radio van.

The electromagnetic energy is transmitted from the transmitter to the antenna and from the antenna to the transmitter by high frequency assymmetrical (coaxial) feeders made up of grade PK-6 cables.

SECRET
NO FOREIGN DISSEM
Declassified in Part - Sanitized Copy Approved for Release 2013/10/18 : CIA-RDP80T00246A071100330001-5

Declassified in Part - Sanitized Copy Approved for Release 2013/10/18 : CIA-RDP80T00246A071100330001-5
NO FOREIGN DISSEM

50X1-HUM

The transition from the symmetrical transmitter output to tahe assymmetrical feeder PK-6 is accomplished by a wide band symmettriaation by a wide band symmetrization unit.

The connection of the PK-6 feeder to the directional antenna , which has a symmetrical input , is accomplished by means of a tuned symmetrization unit.

The feeder is connected to the all directional antenna (cone and disk type) by means of a matching transformer.

The radio communication unit receivers and the auxilliary receiver antenna have an asyymetrical input and therefore the the feeder is directly connected to them.

4v2.High frequency feeders.

For effecient operation of the ultra shortwave radio communication unit the antenna must be as high above the ground as possible. The high frequency and the ultraa high frequency electromagnetic ~~энергия~~ energy is transmitted from the transmitter to the antenna by means of a two-conductor line the so-called feeder line , or simply the feeder.

The feeder line should not distingguish itself with a marked antenna effect , i . e. it should not radiate or receive electromagnetic energy : the energy losses in the feeder line should be small.

The magnitude of the load on the end of the feeder considerable effects the operation of the feeder line. It effects the feeder input impedance , the travelling wave coefficient "KBB" , the efficiency coeffecient "K " and thus the operation of the radio communication unit. For efficient operation of the radio communication unit it is necessary to have a constant feeder input impedance , and high travelling wave and efficiency coefficients. Therefore , the load (antenna) impedance at the

SECRET
NO FOREIGN DISSEM
Declassified in Part - Sanitized Copy Approved for Release 2013/10/18 : CIA-RDP80T00246A071100330001-5

Declassified in Part - Sanitized Copy Approved for Release 2013/10/18 : CIA-RDP80T00246A071100330001-5
NO FOREIGN DISSEM

and of the feeder should be close to the characteristic impedance of the feeder.

If the antenna input impedance is not equal to the feeder characteristic impedance , thanix it is necessary to match the impedances by means of a special matching transformer.

There are various means of matching ant the following ones are used more frequently:

1. Two impedances are matched by means of a section of a feeder which is connected in series between them.

The caracteristic impedance of such a matching transformer is evaluated by means of the equation

where : = = / (4-1)

= characteristic impedance of the feeder im ohms

= input impedance of the antenna in ohms

This methode is used when the load (antenna) input impedance is real , but is magnitude differs from the characteristic impedance of the feeder. This matching method is used in the PAC-YKB radio communication unit for matching the input impedance of the all directional (cone and disk type) antenna to the characteristiek impedance of the feeder.

2. Matching by means of an open or short circuited closed loop (section of a feeder) which is connected in parallel to the feeder at a certain distance from the antenna. The length of the loop and the distance of the place of its connection from the end of the feeder is determined usually experimentally (the length of the shorted loop is approximately a quater of the of teh wavelength and the place of connection of the loop is one fifth of the wavelength from the end of the feeder).

This matching methode is used when the load impedance is a complex quantity , i.e. when it consists of a real andмн an imaginary component (capasitive or inductive).

NO FOREIGN DISSEM
Declassified in Part - Sanitized Copy Approved for Release 2013/10/18 : CIA-RDP80T00246A071100330001-5

Declassified in Part - Sanitized Copy Approved for Release 2013/10/18 : CIA-RDP80T00246A071100330001-5
NO FOREIGN DISSEM

For transmission of the electromagnetic energy from the transmitter to the antenna and from the antenna to the receiver, the radio communication unit uses a coaxial feeder grade PK-6 ,

The reason for using the PK-6 cables in the radio communication unit are as follows:

First of all on account of the all-directional (cone and disk type) antenna (radiator) which is the main antenna for airplane communication,

second af all because the antenna and feeder used in the PAC-YKB radio communication unit have approximately the same characteristic impedance and finally,

third of all on account of the convenient use of the cable and its low losses.

The grid PK-6 cable impedance is equal to 50 ohms , the attenuation is 6 nepers per kilometer , the diameter radio D/dm 2.3 , the wavelength shortening from / is 1.5.

The radio communication unit is equipped with two feeders (one thirty meters long and the other one twenty meters long) for feeding the main communication line antenna and one feeder (5.8 meters long) for feeding the auxilliary receiver antenna (see the radio communication unit connection schematic diagram in the appendix). The thirty meter feeder is the main antenna feeder and the twenty meter feeder is an extention which is used only in extreme cases (in such cases both of the feeders are connected in series).

The thirty meter feeder attenuation is 0,18 nepers. Figure 4-1 shows the dependence of the feeder (grade PK-6 cable) efficiency coeffécient K on the travelling wave coefficient K and on the attenuation (for feeder lengths 1-20 , 30 , 50 and 80 meters).

Declassified in Part - Sanitized Copy Approved for Release 2013/10/18 : CIA-RDP80T00246A071100330001-5

Declassified in Part - Sanitized Copy Approved for Release 2013/10/18 : CIA-RDP80T00246A071100330001-5
NO FOREIGN DISSEM

Fig. 4-1. The efficiency coefficient as a function of the travelling wave coefficient and the length of the PK-6 cable.

From the curves of figures 4-1 it is evident that the in crease of the efficiency coefficient with the increase of the travelling wave coefficient K B is the smaller the longer the feeder and the greater the attenuation is. With the PAC-YKB radio communication unit the travelling wave coefficient K B of the feeder must not be smaller than 50%. The efficiency coefficient of the thirty meter long feeder is between 64 and 68% ,i.e. in other words , that 32 to 38% of the transmitter output is lost in the feeder when operating in the communication range (100 to 150 Mc.).

Special equipment , the so-called symmetrization equipment is used for transition from the symmetrical transmitter output and from the symmetricalantennas to the assymmetrical feeder (cable).

A simple type of symmetrization apparatus is a quater wave enclosing cylinder which is used in the PAC-YKB radio communication unit for transition from the feeder to the symmetrical

SECRET
NO FOREIGN DISSEM
Declassified in Part - Sanitized Copy Approved for Release 2013/10/18 : CIA-RDP80T00246A071100330001-5

Declassified in Part - Sanitized Copy Approved for Release 2013/10/18 : CIA-RDP80T00246A071100330001-5
NO FOREIGN DISSEM

50X1-HUM

directional antenna (see fig. 4-2).

This symmetrization unit consists of an additional quater wave grounded schield placed above the outside of the coaxial feeder sheet with the bottom of the additional shield connected to the feeder sheath.

The purpose of this enclosing sylinder is to prevent the current generated on the inner surface of the feeder sheath to branch out to the outer surface of the feeder sheath at the end of the feeder . The outer feeder surface and the inner surface of the enclosing cylinder from a part of a coaxial short circuited resonant line of a length equal to a quater of the wavelength (see fig. 4-2).

Fig. 4-2. Quater wavelength enclosing cylinder.

Where the enclosing cylinder is connected to the feeder , the standing wave voltage will be 0 and the current at its maximum and at a distance equal to a quater wavelength from the closed and (at the points " " and "c") the voltage will be at its maximum and the current will be 0. Therefore , the input impedance between the points " " and "c" (see fig. 4-2.) will appear to be infinite cannot branch out from the inner surface of the feeder sheath to the outer surface and to the antenna , i.e. Complete symmetry in feeding the antenna is accomplished.

The symmetrization equipment outputto the asymmetrical coaxial feeder is described above in chapter 2.

SECRET
NO FOREIGN DISSEM
Declassified in Part - Sanitized Copy Approved for Release 2013/10/18 : CIA-RDP80T00246A071100330001-5

Declassified in Part - Sanitized Copy Approved for Release 2013/10/18 : CIA-RDP80T00246A071100330001-5
NO FOREIGN DISSEM

50X1-HUM

4-3. All-directional antenna - the cone and disk type and the rod type.

1. The antenna band width.

The broad band antenna is an antenna which maintains its paramater (the radiation diagram , input impedance ,etc.) with in a sufficiently wide band without any adjustments.

These radiators are characteristiazed by large diameters and various designs confurations. The use of the large diameters reduces the inductance and increases the capacitance of the radiator. As a result of this a broad band radiator has a considerably flatter input impedance curve , which changes only slightly with a change in frequency and this assures the possibility of matching this impedance with the feeder characteristic impedance and enables normal transmitter operation within the given frequency range , without special adjustments. The type PAC-ZKB radio communication unit uses two all-directional broad band antenna (with a circular pattern):

1) the cone and disk type and
2) the rod type for the auxilliary receiver.

2. The cone and disk type antenna.

The cone and disk type antenna is used primarily for air plane communication.

The antenna is a vertically polorized half-way assymetrical wide band radiator of the cone and disk type.

The schematic diagram of the cone and disk type radiator is given by figure 4-3.

This radiator consists of two main components which are insulated from each other. The first component consists of a

SECRET
NO FOREIGN DISSEM
Declassified in Part - Sanitized Copy Approved for Release 2013/10/18 : CIA-RDP80T00246A071100330001-5

Declassified in Part - Sanitized Copy Approved for Release 2013/10/18 : CIA-RDP80T00246A071100330001-5
NO FOREIGN DISSEM

metal disk (1) with a rod (2) , and the other component consists of a metal cone (3)

The high frequency voltage , which feeds the radiator by means of the coaxial feeder (4) , is applied to the points "a" and " " via the matching transformer (5) which is placed coaxially inside the cone.

The cone and disk type radiator is actually a reshaped symmetrical half-way radiator.

The reshaping of oen radiator half into the cone shape results in a good input impedance band width characteristic

The reshaping of the other radiator half into the disk shape results in a reduction of the antenna dimensions.

The vertically polorized cone and disk shape antenna is conveniently fed by means of an assymmetrical feeder (grade PK-6 cable). This circumstance is one of the main advantages of this type of an antenna.

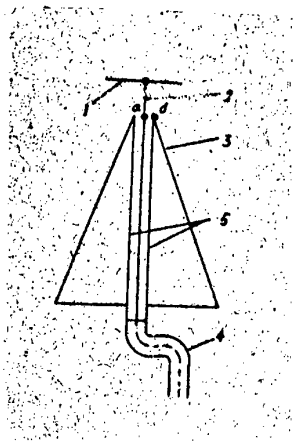

Fig. 4-3. Schematic diagram of the cone and disk type radiator: 1.- metal disk ; 2- holder ; 3- cone ; 4- coaxial feeder ; 5- matching transformer.

The value of disk and cone type radiator input impedance real component varies with the band width from 40 to 80 ohms and the imaginary component value is insignificant. This enables us to obtain a travelling wave coefficient RSB smaller than 0,6 in a feeder with a characteristic impedance of 50 ohms.

NO FOREIGN DISSEM
Declassified in Part - Sanitized Copy Approved for Release 2013/10/18 : CIA-RDP80T00246A071100330001-5

Declassified in Part - Sanitized Copy Approved for Release 2013/10/18 : CIA-RDP80T00246A071100330001-5

50X1-HUM

The travelling wave coefficient K B is somewhat improved by means a quater wave matching transformer which is an extension of the feeder. The characteristic impedance of this transformer is determined experimentally and is approximately 60 ohms.

The antenna radiation pattern in the horizontal plane is all-directional , i.e. the field strength created by the antenna is indepedent of the direction in the horizontal plane.

In the vertical plane the radiatmxion pattern is similar to the radiation pattern of a half way radiator.

The antenna consists of a metal disk and a cone with a matching transformer inside the cone (see fig. 4-4)

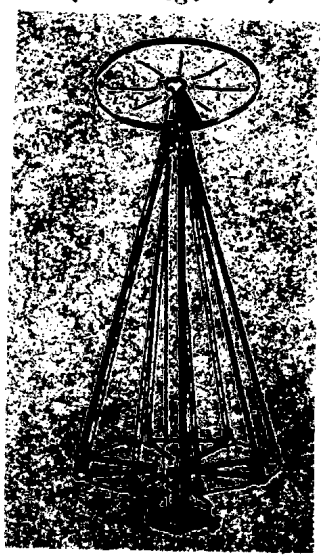

Fig. 4-4. The cone and disk type antenna (general view).

To reduce the wind resistance of the tower the cone is made of brass tubes uniformly diertibuted around its surface.

These tubes are fastened at the apex of the cone to the upper outer part of the transformer tubing by means of resilient bronze straps. The bottom ends of the tubes are connected to the brass tubes of the cone base by means of elbow fittings and the base tubes are connected to a movable sleeve

Declassified in Part - Sanitized Copy Approved for Release 2013/10/18 : CIA-RDP80T00246A071100330001-5

Declassified in Part - Sanitized Copy Approved for Release 2013/10/18 : CIA-RDP80T00246A071100330001-5
NO FOREIGN DISSEM

50X1-HUM

on the lower part of the transformer tube. On the circumference of the cone base is a mutal cable.

Such a designed of the cone enables its collapsing (like an umbrella).

The matching transformer is a section of a coaxial line with a characteristic impedance of 60 ohms and its is an extension of the feeder : the transformer length is approximately a quater of the average length of the wave band.

Inside this transformer is a brass rod which is held in place by a ceramic insulator at the upper end.

A duralumin radiator disk is fastened to the end of the rod which protrudes from the trabsformer. The disk is easely removable from the cone and transformer (by unscrewing).

The botton and of the transformer is finished off with a special connector for attachement to the feeder connector.

The antenna feeding voltage is led along the inner feeder conductor through the central rod of the transfoemer to the disk ; and along the feeder sheath and outer transformer tybe to the cone.

The radio communication unit is equipped with two antenna af the cone and disk type: an operating one and a spare one.

The cone and disk type radiator (antenna) is fastened to the telescopic tower by means of a special bracket with belongs to the towerequipment.

3. The auxilliary receiver rod type antenna.

The auxilliary receiver antenna is a quater wave verticallypolarized rod radiator with a counterbalance (see fig. 4-5).

The antenna is instal led on the roof of the radio van by means of a through bushing installed in the roof.

SECRET
NO FOREIGN DISSEM
Declassified in Part - Sanitized Copy Approved for Release 2013/10/18 : CIA-RDP80T00246A071100330001-5

Declassified in Part - Sanitized Copy Approved for Release 2013/10/18 : CIA-RDP80T00246A071100330001-5
NO FOREIGN DISSEM

The horizontal plane radiation pattern of such an antenna is the same as that of the cone and disk type antenna , i.e. all-directional.

From figures 4-5 it is evident that the quater wave rod is an exrention of the inner feeder conductor from the PK-6 cable .The feedre sheath is connected to the counter balance.

The input impedance of such an antenna is approximately 25 ohms.

The great PK-6 cable has been chosen for convenient matching of its characteristic impedance to the input impedance of the receiver. Its characteristic impedance is approximately 50 ohms.

The difference between the antenna input impedance (approximately 25 ohms) and the feeder characteristic impedance (50 ohms) does not materially effect the operation of the auxilliary receiver.

As a result of this there is no need to use a special matcing unit and the design of the rod type antenna is not complicated.

The quater wave rod is made of a 70 mm. diameter by 730 mm. long durakumin tube.

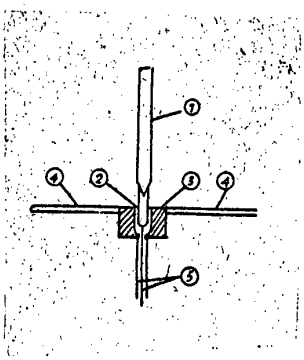

Fig. 4-5. Schematic diagram of the auxiliary receiver antenna. 1- quater wavelength radiator rod ; 2- inner contact of the through bushing ; 3- housing of the through bushing ; 4- counter balance conductor ; 5- coaxial feeder.

As a result of a relatively greater diameter to length of the rod ratio a better antenna band width - input impedance cha-

SECRET

NO FOREIGN DISSEM

Declassified in Part - Sanitized Copy Approved for Release 2013/10/18 : CIA-RDP80T00246A071100330001-5

Declassified in Part - Sanitized Copy Approved for Release 2013/10/18 : CIA-RDP80T00246A071100330001-5
NO FOREIGN DISSEM

racteristic - is obtained.

The conical end of the rod is attached to the inner through bushing conductor. The counter balance is designed in the shape of four rays which extend from the holder. These rays are metal straps mounted on the roof of the radio van.

The length of these straps is approximately a quater of the longest wave of the band , which is very important for improved opration of the antenna.

The auxilliary receiver feeder is run along the left wall inside the radio van and is connected to the connector in the roof of the van. The inner jack of the roof connector is an extension of the inner conductor and the outer part of the connector is a part of the through bushing hoder.

The inner throught bushing conductor is fastened in the holder by a ceramic insulator: the hohder is permaneatly mounted in the radio van roof.In case when the radiator is taken down, the upper part of the through bushing is covered with a glass cap.

4-4. The wave channel type(YAGI) directional antenna.

1. General directional antenna information.

The short length of the ultra short waves allows to attain , with relatively small antenna dimensions a high degree of directional radiation , i.e. the electro magnetic energy is radiated preferantly in one direction.

Directional antennas are used in radio cummunication between two stationary communicating stations , during directional communication in navigational service and in all kinds of radiolocating apparatus.

The directional antenna have a wxkx whole number of advantages as compared with the all-directional antennae such as:

1; The radiated energy is used by far more economically since it is directed under a small angle to the other communicating station , as a result of which it is possible to cover

NO FOREIGN DISSEM
Declassified in Part - Sanitized Copy Approved for Release 2013/10/18 : CIA-RDP80T00246A071100330001-5

Declassified in Part - Sanitized Copy Approved for Release 2013/10/18 : CIA-RDP80T00246A071100330001-5
NO FOREIGN DISSEM

50X1-HUM

greater distances with a smaller transmitter power.

2. The interference from other transmitter from other transmitter and the atmospheric and industrial disturbancces are greatlyreduced at the reception location , since the directional antenna is selective in a given direction both when sending as well as when receiving.

In the meter band the directional antenna of the wave channel" (YAGI) type also called the "Director Antenna" is used most frequently. This antenna consists of a number of paralel radiators about a half-wave length long , spaced inone plane in the direction of the maximum radiation. one of the radiators is excited by the transmitter (the active radiator) and the rest of the radiators (passive radiators) are ~~ex~~ excited by the electromagnetic field of the active radiator.

The passive radiators are divided into two groups , thoss which reflex the energy in a given direction -"the reflectors and those ~~with~~ which direct the energy -"the directors".

Usually only one reflector is used , since the use of several reflectors complicates the design and does not render any apparent advantages in comparison to a single one. The number of directors is determined in relation to the ampli fying ability of the antenna , the antenna amplificati on coeffi cient with an incressing number of directors.

The distribution of the radiators is given by figures 4-6. The distance between the antenna radiators and their length is determined experimentally in sych a way as to obtain as ~~he~~rrow a ~~pattern~~ pattern as possible in the direction of the diractors - themajor lobe - with aluminium side and back and minor lobes. This correspondsmax to the greatest antenna amplification in the direction of the maximum of the major lobe.

The principle of the directional antenna of the "wave-channel type leads to the following.

SECRET
NO FOREIGN DISSEM
Declassified in Part - Sanitized Copy Approved for Release 2013/10/18 : CIA-RDP80T00246A071100330001-5

Declassified in Part - Sanitized Copy Approved for Release 2013/10/18 : CIA-RDP80T00246A071100330001-5
NO FOREIGN DISSEM

50X1-HUM

1.The distance between the reflector and the active radiator and its length must be such that the field created by the reflector in the direction of the directors willbe in phase with the field of the other radiators , and the field created by this reflector is in the anti parallel direction will be out of phase with the field of the other radiators

This way the electromagnetic field in the direction of the reflector is weakened and in the direction of the directors is strengtened - this direction is the antenna direction.

Therefore the phase of the reflector current must lead the active radiator current phase , which actually takes place when the length of the reflector is somewhat longer than a half wave length.

2. The length of the directors and their distribution is selected in such a way , that the field created by each one of them will be in phase with the field of the other radiators.

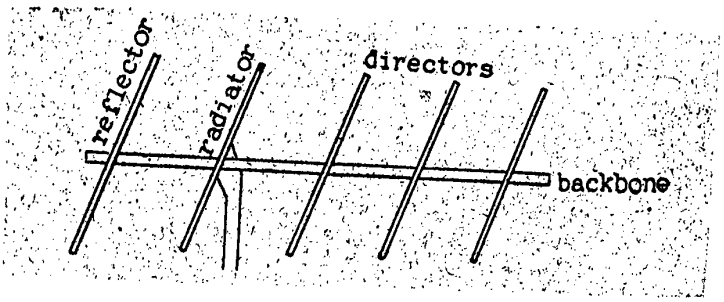

Fig. 4-6. Sechematic diagram of the wave"channel" (YAGI) type directional antenna.

Thus the current in each director must lag in phase with respect to the current in the preceding radiator. This condition is fulfilled when the director length is somewhat shorter then a half - wave length.

The final resultant ~~field~~ field is considerably strengtened in the direction and the antenna radiation in this direction is at a a maximum. In other directions the phaseon the field strength cr created by the individual radiators varies

SECRET
NO FOREIGN DISSEM
Declassified in Part - Sanitized Copy Approved for Release 2013/10/18 : CIA-RDP80T00246A071100330001-5

Declassified in Part - Sanitized Copy Approved for Release 2013/10/18 : CIA-RDP80T00246A071100330001-5
NO FOREIGN DISSEM

and the resulting field decreases , figure 4-7 shows a characteristic radiation pattern of the "wave channel" rype directional antenna.

The wvae channel type diractional antenna are tuned antennas , since their radiation pattern and their input impedance is dependent on the operating wavelength. In the ordinary "wave cxhannel" type directional antenna all of the radiators are distribured at a quater wave length from each other.

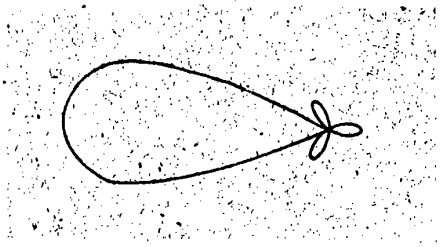

Fig. 4-7. typical horizontal plane radation pattern of the "wave channel" (YAGI) type directional antenna.

2. The radio communication unit directional antenna.

Importance and charactristic . Four ground communication the type PAC-YKB radio communication unit uses the so-called "shortened antenna" of the wave channel" (YAGI) type consisting of five vsrticaly polarised symmetrical radiators of which one is active and four are passive (one reflector and three directors).

The antenna is called a shortened because the distance between the radiators , as determined experimentally , are considerably shorter than a quater wavelength and thanks to this the antenna dimensions are greatly diminished. The respective lengths of the radiators and the distance between then togather with the operating wavelength are given by figures 4-8

The horizontal plane radiation pattern of this antenna is shown by figure 4-9.

In the direction of maximum radiation the coeffecient

NO FOREIGN DISSEM
Declassified in Part - Sanitized Copy Approved for Release 2013/10/18 : CIA-RDP80T00246A071100330001-5

Declassified in Part - Sanitized Copy Approved for Release 2013/10/18 : CIA-RDP80T00246A071100330001-5
NO FOREIGN DISSEM

50X1-HUM

antenna amplification in comparison to the half wavelength radiator (also in comparison to the cone and disk type radiator within the operating wavelength range is within the range from 2,2. to 2,7. The coefficient of power amplification in agreement with this is then 4.8. to 7.3.

Note. The coefficient of field amplification is equal to the square root of the power amplification coefficient.

Fig. 4-8. Spacing between radiators and their lengths for various wavelengths.

With the directional antenna raised 16.5 meters above ground the dependable commnication is achieved over the distance of 70 kilometers when operating in an average hilly countryside.

The antenna impedance real component is about 40 ohms and the imaginary component is insignificant. This enables us to obtain a siificiently good travelling wave coefficient K B of not less than 0.5 in a 50 ohm feeder then it is directly connected to the antenna without any complimentary matching appaiatus.

Fig. 4-9. Radiation pattern of the "wave channel" type antenna in the horizontal plane.
1,2,3- antenna directors; 4-reflector; 5-active radiator.

SECRET
NO FOREIGN DISSEM
Declassified in Part - Sanitized Copy Approved for Release 2013/10/18 : CIA-RDP80T00246A071100330001-5

Declassified in Part - Sanitized Copy Approved for Release 2013/10/18 : CIA-RDP80T00246A071100330001-5
NO FOREIGN DISSEM

Antenna design. As was already mentioned above , the antenna consists of five symmetrical vertically polarized radiators. All radiators are located in a single plane at right angles to one axis called the back-bone (see fig. 4-100.

The antenna amplification coefficient and the antenna input impedance have an optimum values only under precisely specified conditions of radiator lengths and spacings with respect to the wavelength. Therefore , in order to obtain asgreat a coefficient of amplification and necessary input impedance as possible , it is necessary that the antenna be tuned to the operating frequency. In every case the difference between the tuning frequencies of the receiver and the antenna must not be in excess of 35 Mc.

The necessary of tuning has been taken into account already during the designing of the antenna by placing scales on the antenna tuning elements.

The antenna is of the disassembly type. The main antenna components are : The five radiators of which one is active and to others are passive.

Each of the passive radiator consists of two two thin duralumin tubes interconnected with a duralumin bracket to which they are welded. The bracket has an opening at right angles to the tubes.

Duralumin plugs with heads on their ends are insreted into the open end of the tubes. The body of the plug has an engraved radio communication frequency scale graduated in megacycles. The plugs are movable within the tubes and can be slid in and out to adjust the total radiator length and thus to tune the radiators to the given frequenacy. To lock the plugs in the desired place, the tubes cary on their ends split bushings with coupling nuts which have an internal conical surface and threads on the outer surface.

NO FOREIGN DISSEM
Declassified in Part - Sanitized Copy Approved for Release 2013/10/18 : CIA-RDP80T00246A071100330001-5

Declassified in Part - Sanitized Copy Approved for Release 2013/10/18 : CIA-RDP80T00246A071100330001-5
NO FOREIGN DISSEM

When the coupling nut is tightened , the split bushing clamps the plug and locks it in place. The outher adge of the bushing is used as a pointer, since the desired plug graduation is brought in thato justaposition with it during the tuning of the radiator.

The scale on the plug is graduated in megacycles from 100 to 150 Mc. ; the graduations are for each one megacycle and every fifth graduation is numbered , wit all but one gradiatiob "100" marked only in the last two digits;for example , the graduation 06 correspondends to a frequency of 105 Mc. , the graduation 40 correspondends to 140 Mc.,etc.

The radiator brackets have engraved numbers "1" , "2" , "3" , or "4" depending on the number of the radiator.

The passive radiators are assembled with their openings on the duralumih tubes , the so-called backbone. The radiators"1" , "2" , and "3" are assembled on a 1150 mm. lomg tube , the so-called director backbone and the radiator "4" is assembled on a 530 mm. tube called the reflector backbone

A flat strap is screwed to each of these tubes almost along theim entire lengths and the brackets have a suitable cutout in their openings for this strap. The strap assures the proper placing of the radiators on the tube and serves as a guide when the radiators are adjusted along the tube

Since the tuning of the antenna does not consist only of adjusting the necessary radiator lengths , but also in adjusting the spacing of the radiators , therefore the radiators backbones have engraved scales of the radio communication frequency rangegraduated in megacycles , and the brackets of these radiators have on one side small rectangular cutouts. The radiator are assembled on the backbones in such a way that the edge of the cutout will agree with the proper graduation on the scale.

Declassified in Part - Sanitized Copy Approved for Release 2013/10/18 : CIA-RDP80T00246A071100330001-5

Declassified in Part - Sanitized Copy Approved for Release 2013/10/18 : CIA-RDP80T00246A071100330001-5
NO FOREIGN DISSEM

The scale is graduated in megacycles from 100 to 150 Mc. ; the gradhations are in 2 Mc. and every tenth Mc. are numbered.

Fig. 4-10. The "wave channel" (Yagi) type directional antenna(general view)

To ensure the proper assembly of the antenna , the number of the radiator which belongs to the respective position is angraved near at scale on the backbone.

Both backbones are connected to each other by a cross bracket made of die cast silumin into which the are assembled from opposite sides.

This cross bracket also carries the active radiator and the symmgtrization unit (see fig. 4-11)

The active radiators is symmetrical and resembles the passive radiators with that difference that with the passive radiators the two halves are connected together with a bracket , whereas with the active radiators the two halves remain separated and at their ends are equipped with a coupling nut by which they are fastened in tmhe same plane with the passive radiators to the bosses of the cross bracket.

The bosses to which the active radiators are fasrened are insulated and therefore the active high frequency radiator is

Declassified in Part - Sanitized Copy Approved for Release 2013/10/18 : CIA-RDP80T00246A071100330001-5

Declassified in Part - Sanitized Copy Approved for Release 2013/10/18 : CIA-RDP80T00246A071100330001-5
NO FOREIGN DISSEM

completely insulated from the cross bracket and from the rest of the anntenna.

The symmetrical active radiator is fed by means of a coaxial feeder via a symmetirization unit which utillezes an enclosing cylinder (see fig. 4-2).

Fig. 4-11. Transition section with the symmetrization unit and the active radiator of the "wave channel" (Yagi) type directional antenna:
1- housing of the bushing ;2-active radiator;3- outer tube of yhe symmetrization unit (enclosing cylinder): 4- inner tube of the symmetrization unit; 5-inner rod;6-anular ringof the symmetrization unit (shorting connection); 7-30 meter feeder; 8- feeder connector.

The symmetrization unit consists of two main parts: a duralumin tube (the enclosing cylinder)and a piece of PK-6 cable equal in length of the tube and located inside this tube.

On one side of the tube is a connector , the housing of which is permanently fastened inside the tube , and electrically connected to the cable sheath; the center pin of the connector is insulated from the housing and is connected to the inside conductor of the cable.

The other end of the tube which is fastened in the through bushing and the end of the PK-6 cable extending from the tube is connected by the through bushing pins to the active radiator

Declassified in Part - Sanitized Copy Approved for Release 2013/10/18 : CIA-RDP80T00246A071100330001-5

Declassified in Part - Sanitized Copy Approved for Release 2013/10/18 : CIA-RDP80T00246A071100330001-5
NO FOREIGN DISSEM

50X1-HUM

4-12. The "wave channel"(Yagi) type directional antenna mounted mounted on the tower.

Declassified in Part - Sanitized Copy Approved for Release 2013/10/18 : CIA-RDP80T00246A071100330001-5

Declassified in Part - Sanitized Copy Approved for Release 2013/10/18 : CIA-RDP80T00246A071100330001-5
NO FOREIGN DISSEM

50X1-HUM

the inner conductir of the cable is connected to one half of the radiator , and the cable sheath is connected to the other half of the radiator (see fig. 4-11).

Since the antenna must operate within the frequency range , the symmetrization unit must be tunable to the operating frequency.

Therefore the center section of the tube has three long axial slots symmetrically spaced around the circumference and the PK-6 cable , inside the tube , has its outer insulation removed. from the sheath is bare.

Inside the tubing is a metal anular ring with may slide up and down and which electrically short circuits the outer cable sheath with the inner surface of the tube. The annular ring may be locked in any position by tightening three screws whose heads extend through the above mentioned tube slots.

The annular ring is adjusted during each tuning of the antenna in such a way that the outer sheath of the feeder is connected electrically to the inner surface of the tube at a quater wavelength distance from the point of the feeder connection to the active radiator. In suchs a case the outer cable sheath surface of the tube represent a quater wavelength concentric resonant line closed on its end, with the impedance at the end of the feeder unusually nigh for the given frequency. Thanks to this , practically no branching out of the current to the outer sheath of the feeder cable takes place.

Along one of the three axial slots of the outer surface of the tube is an engraved scale of the working frequency range which is used for tuning purposes.

Under all three screw used for locking the short circuiting annular ring are square washers with a taper on one side.

SECRET
NO FOREIGN DISSEM
Declassified in Part - Sanitized Copy Approved for Release 2013/10/18 : CIA-RDP80T00246A071100330001-5

Declassified in Part - Sanitized Copy Approved for Release 2013/10/18 : CIA-RDP80T00246A071100330001-5

50X1-HUM

These washers (facing the shortwave scale) are then adjusted to the graduation of the scale.

The scale is graduated in megacycle from 100 to 150 mc. with graduation of 1 Mc. and with every 5 Mc. numbered.

The antenna is mounted on the tower by means of a special mast and a rotable holder.

A general view of the antenna fastened to the tower is given by figure 4-12.

4-5. The telescopic tower.

The telescopic tower is used for raising the transmitter antenna equipment to a height of 16.5 meters.

The radio communication unit has one telescopic tower with guy cables (see fig. 4-13).

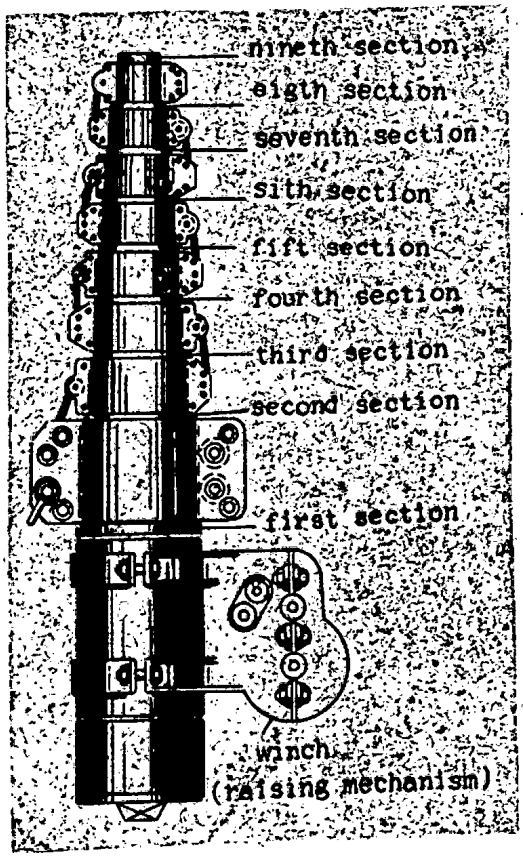

Fig. 4-13. Telescopic tower (general view).

Declassified in Part - Sanitized Copy Approved for Release 2013/10/18 : CIA-RDP80T00246A071100330001-5

Declassified in Part - Sanitized Copy Approved for Release 2013/10/18 : CIA-RDP80T00246A071100330001-5
NO FOREIGN DISSEM

The height of the raised tower with the directional or all directional antenna equipment belonging to the radio communication unit is 16 meters.

The weight of the tower without the antenna equipment is 65 kg.

The necessary time for preparing and raiseng the antenna is 25 to 30 minutes.

The tower is designed for raising antenna equipment up to 25 Kg.

The gigk height of the lowered tower is 2.6 meters.

The tower of the radio communiction unit is mounted on the chassis of the radio van. A possibility is given to set up the tower on the ground and for this purpose the radio communication unit is equipped with a platform (base of the tower) and guy cables of the first section.

2. Assembly of the tower.

The telescopic tower consists of one stationary section made of steel tubing , eight movable sections made of duralumin tubing , pulleys , steel cables and a winch.

The stationary section. The winch is fastened to a large rectangular opening of the first section (see figures 4-13 and 4-14). At the bottom of the first section tube is a base. The upper end of the stationary section carries a divided silumin cast bracket bolted together into a single unit.

The movable section . The design of the first movable section differs from the remaining movable ones on ly by the fact that it has a cutout on this side near its base with a cast brass pulley fastened to the base (see fig. 4-15 and 4-16).

To prevent the cable from slipping off the pulley there is a-yoke mounted togetherr with the pulley on the shaft (see fig. 4-17.)

SECRET
NO FOREIGN DISSEM
Declassified in Part - Sanitized Copy Approved for Release 2013/10/18 : CIA-RDP80T00246A071100330001-5

Declassified in Part - Sanitized Copy Approved for Release 2013/10/18 : CIA-RDP80T00246A071100330001-5
NO FOREIGN DISSEM

50X1-HUM

Fig. 4-14. The first tower section.

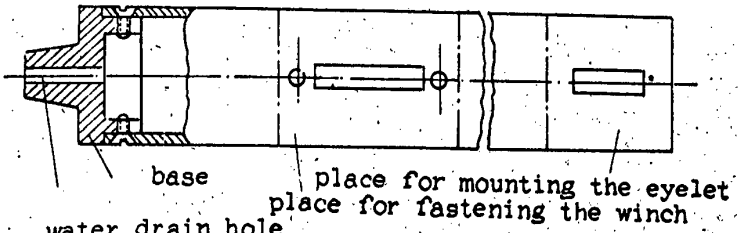

Fig. 4-15. The second (movable) tower section.

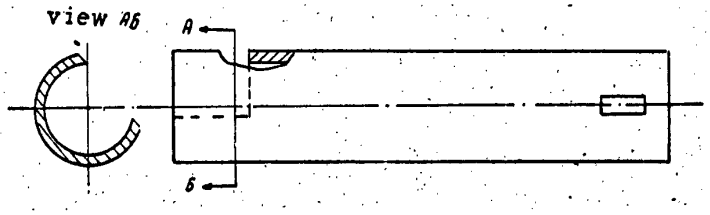

Fig. 4-16. The second(movable) tower section (assembly).

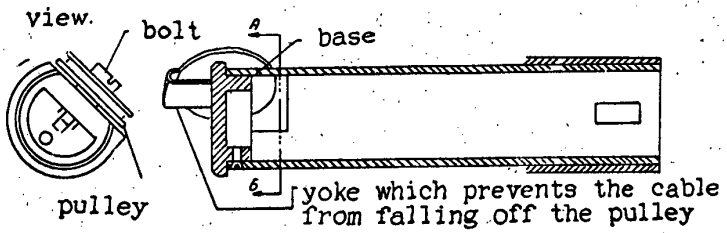

Fig. 4-17. Movable tower section (complete)

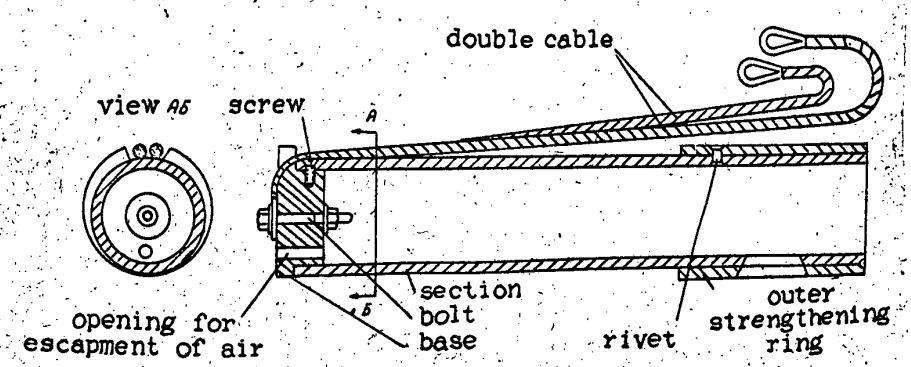

Fig. 4-18. Assembly of the movable sections.

SECRET
NO FOREIGN DISSEM
Declassified in Part - Sanitized Copy Approved for Release 2013/10/18 : CIA-RDP80T00246A071100330001-5

Declassified in Part - Sanitized Copy Approved for Release 2013/10/18 : CIA-RDP80T00246A071100330001-5
NO FOREIGN DISSEM

50X1-HUM

Fig. 4-19. Eccentric base.

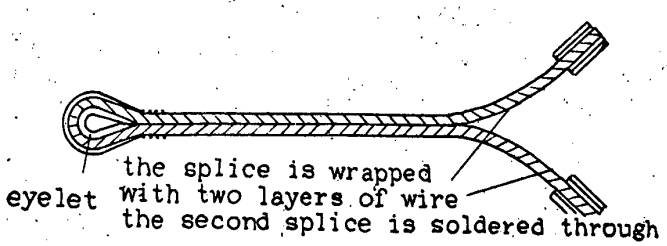

Fig. 4-20. Cable.

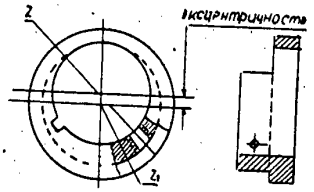

Fig. 4-21. Essentric ring.

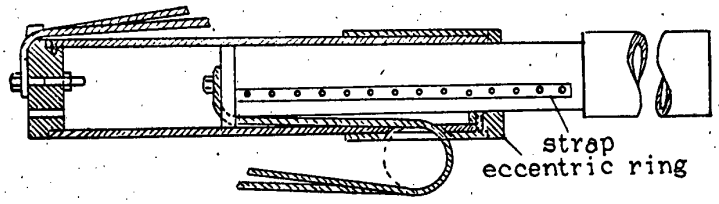

Fig. 4-22. Coupling of twomovable towersections.

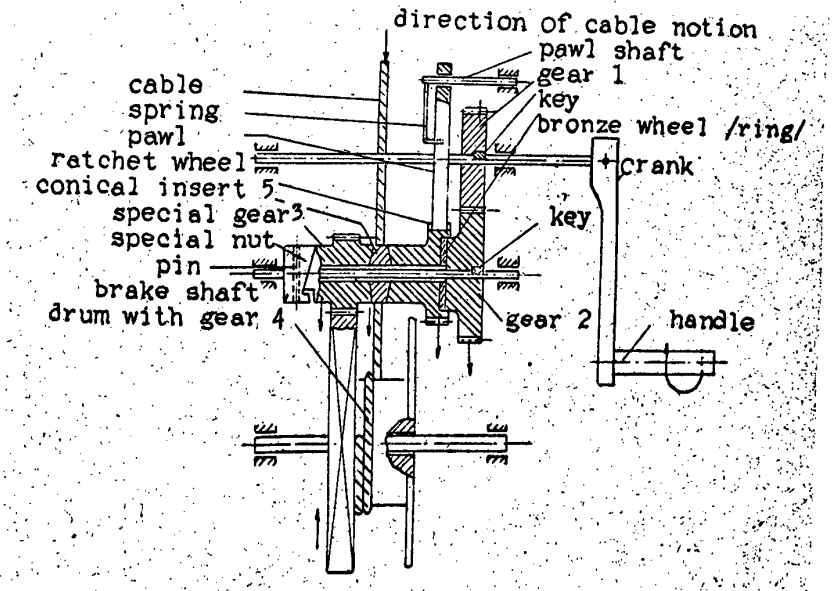

Fig. 4-23. Diagram of the winch (raising) mechanism.

Declassified in Part - Sanitized Copy Approved for Release 2013/10/18 : CIA-RDP80T00246A071100330001-5

Declassified in Part - Sanitized Copy Approved for Release 2013/10/18 : CIA-RDP80T00246A071100330001-5
NO FOREIGN DISSEM

The design of the remaining movable sections in similarwas and corresponds to figure 4-17.

As is apparent from the drawing a ring is pressed on to the upper end of the section and to prevent it from moving; it is rivited on with steel rivets. The ring is used for strengthening the section in the place where the bracket is to be mounted ,

A window is xx cut out in the reiforching ring and the section. This window is used for passing the cable from the inside of the section out to the pulley (see fig. 4-18).

At the other end of the section a silumin cast eccentric base is fastened to the bottom of the section (see fig. 4-17) 4-18 and 4-19).

The eccentricity is used for creating a space of 4.5 to 5 mm. between the tower section to allow the passage of the cables (see fig. 4-18).

A double 4 mm. diameter cable is fastened with a bolt to the bottom of the base and the cables are placed in the slot of the eccentric section.

The cables. The cables are prepared in the following manner; the cable is looped an eyelet and immediately next to it it is wrapped with a steel wire and soldered with OC-61 solder (fig. 4-20).

Each and the cable is looped into an eyelet and then twice interwoven. The latter interweaving is soldered with OC-40 s solder.

The length of the cable ends must be exactly alike. If the lengths were different , then only one would take the load during tthe raising of the tower and this might then tear.

To ensure stright motion during the raising or lowering of the tower and eccentric annular ring is placed and fastened with a screw on the top of each tower section (see fig. 4-21).

Declassified in Part - Sanitized Copy Approved for Release 2013/10/18 : CIA-RDP80T00246A071100330001-5

Declassified in Part - Sanitized Copy Approved for Release 2013/10/18 : CIA-RDP80T00246A071100330001-5
NO FOREIGN DISSEM

The eccentrisity of the top annular ring and of the bottom base are alike. hen assembling the tower eccentrisity of the ring and the base must face one way.

A slot is cut out in the side of the ring through which a strap passes. Each section has a strap mounted on its side and this straps prevent relative motion of the tower sections.

The winch. The raising mechanism is assembled in a housing covered which a cover secured into it with six bolts (see fig. 4-13). Both the housing and the cover are silumin castings.

The winch mechanism , whose schematic diagram is given on figure 4-23 , consists of the following components:

1. A cranck with a handle.

2. A gear 1 fastened to the shaft of the crank by a key.

3. A fretion brake consisting of: a gear 2 , a bronze ring , a ratchet wheel , a disk insert 5 , a special gear 3 , a special screw nut and the brake shaft.

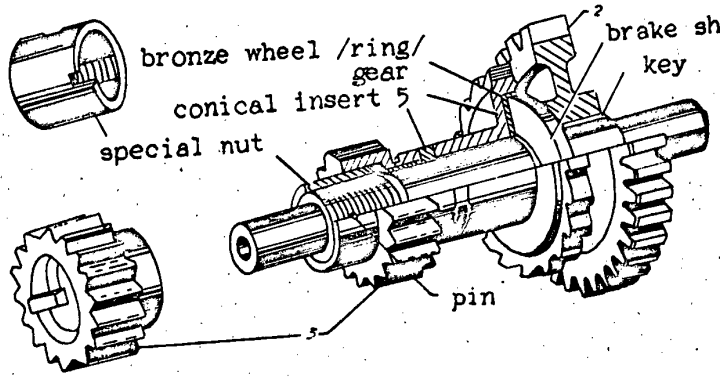

Fig. 4-24. The winch friction brake.

A special gear 3 has on its hub on the special screw nut side a spiral boss and the special nut has on its gear 3 side a corresponding depression (see fig. 4-24).

The gear 2 is fastened to the brake shaft by means of a key. The bronze ring , the ratchet wheel , the disk insert 5 and the special gear 3 are free on the shaft. The special screw nut

SECRET

NO FOREIGN DISSEM

Declassified in Part - Sanitized Copy Approved for Release 2013/10/18 : CIA-RDP80T00246A071100330001-5

Declassified in Part - Sanitized Copy Approved for Release 2013/10/18 : CIA-RDP80T00246A071100330001-5
NO FOREIGN DISSEM

50X1-HUM

is fastened to the shaft by means of a pin so as to leave a space of 0.2 to 0.4 mm. between the spiral boss and the corresponding depression in the hub of the special gear 3.

4. A gear 4 together with the cable drum form a single unit.

3. Operation of the winch mechanism during the raising of the tower.

To rais the tower turn the crank and handle clockwise. The gear 1 transmit the motion to gear 2 and to the special screw nut which is permanently fastened to the same shaft with the gear 2.

Since the special nut has a spiral boss, as soon as it stars turning it bears against the corresponding spiral depression in the gear hub 3 and turns it to the right. The gear 3 by frction, brings into contat the disk insert 5, the ratchet wheel, the bronze ring and the gear 2.

Naturraly, all components on the break shaft rotate in one direction. The gear 3 transmits the motion to drum 4 to which one end of the cable is fastened and the cable is wound onto the drum.

With the winding of the cable onto the drum, the raising or the second tower section takes place, the second section lifts the third one, the third one the fourth one, etc. As a result of this all tower sections are being raised simultaneously (see fig. 4-23).

The pawl of the ratchet wheel skips on the ratchet teeth and as a result of this a clicking noise coming out of the mechanism is usually heard.

When while raising the tower, turning of the crank is stopped, thenx the force of the hand which acted on gear 3 in

SECRET
NO FOREIGN DISSEM
Declassified in Part - Sanitized Copy Approved for Release 2013/10/18 : CIA-RDP80T00246A071100330001-5

Declassified in Part - Sanitized Copy Approved for Release 2013/10/18 : CIA-RDP80T00246A071100330001-5
NO FOREIGN DISSEM

50X1-HUM

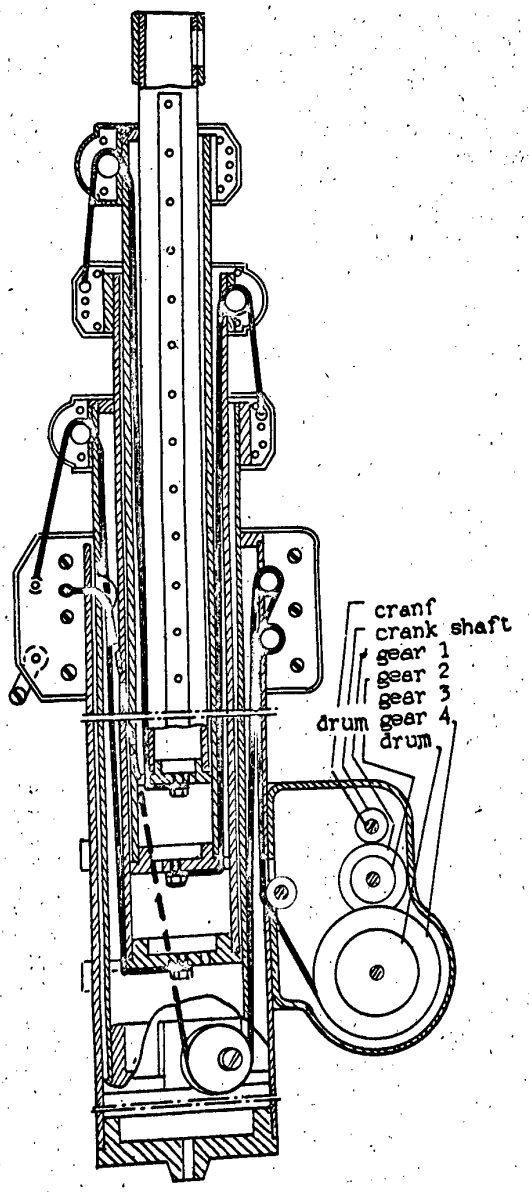

Fig. 4-25. Kinematic diagram of 3 telescopic tower sections.

Declassified in Part - Sanitized Copy Approved for Release 2013/10/18 : CIA-RDP80T00246A071100330001-5

Declassified in Part - Sanitized Copy Approved for Release 2013/10/18 : CIA-RDP80T00246A071100330001-5
NO FOREIGN DISSEM

replaced by a force consisting of : the weight of the raised tower and of the antenna equipment (see fig. 4-26). This force will press on gear 4 in the direction "A" and will not allow the gear 3 to disengage from the frictional coupling.

Since the ratchet wheel will be clamped , it will not permit the brake assembly to rotate thanks to the pawl which engag ge:
engages the ratchet wheel teeth(see fig. 4-23); the raising mechanism will not rotate.

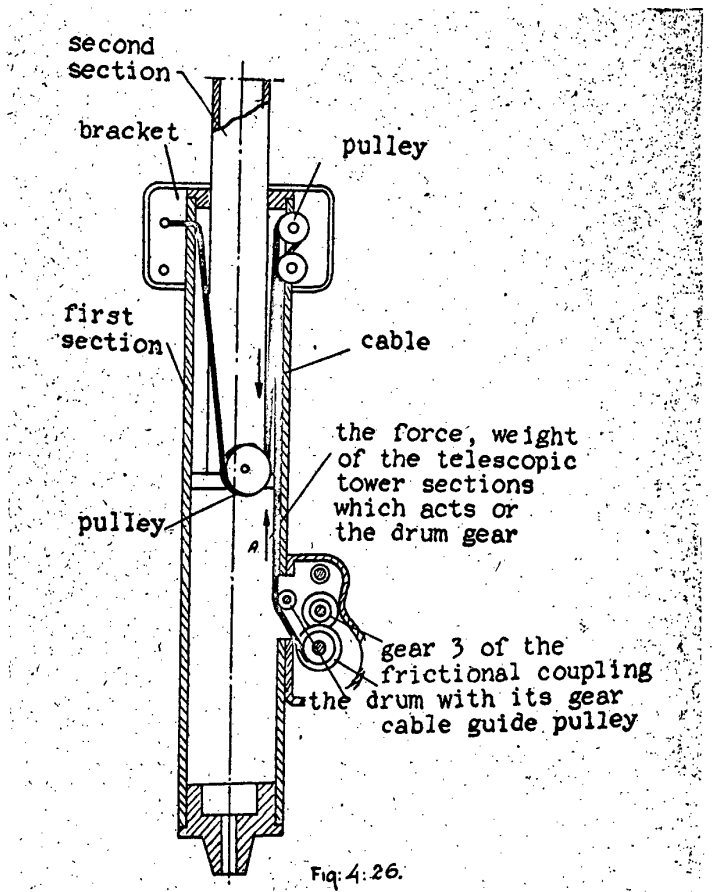

Fig. 4-26.

Fig. 4-23. Diagram of the connection of the second section cable with the first section and the drum of the winch.

Three markers are painted with red paint on the second tower section for checking and limiting the raising of the tower to the necessary height.

The first red marking ring correspondends to the raising of

Declassified in Part - Sanitized Copy Approved for Release 2013/10/18 : CIA-RDP80T00246A071100330001-5

Declassified in Part - Sanitized Copy Approved for Release 2013/10/18 : CIA-RDP80T00246A071100330001-5
NO FOREIGN DISSEM

the tower to a height of 15 meters , the second ring to 16 meters and the third ring to 16,5 meters.

It is permitted to raise the tower only to the appearance of the second red ring mark , i.e. to the height of 15 meters.

The height of the tower may be anywhere from 2,6 to 16 meters. It is sufficient to stop turning the crank at the right moment.

4. Operation of the winch mechanism during the lowering of the tower.

When lowering the tower , the crank is turned counter-clockwise. As a result of this the weight rotates mechanism in the direction opposite to the direction of the arrows on figure 4-23. As is evident from the diagram , the special screw nut tooth on the spiral boss rests against the corresponding tooth on the spiral boss of the gear hub 3. A crack 0.2 to 0.4 mm. will form between the special screw nut and the gear 3 (see fig.4-27).

Since the gear 3 is free on the shaft , it will shift along the shaft to the left and the frictional coupling willcease.

The gear 3 will start to turn the gear 4 with the drum. The cable will start unreeling from the drum. Simultaneously with this the tower sections under the influence of their own weight will start sliding into each other until their brackets meet.

If during the lowering of the tower , the turning of the crank is interruoted , then the force "A" , which acts on the cable in one and the same direction , regardless wether the towerls being lowered or raised , (see fig. 4-26) , will stop the weight and the winch mechanism will turn a bit in the other direction.

Thanks to the pressure of the gear 4 teeth on the teeth of the gear 3 , which , as result of the action of the spiral boss , moves to the right , a frictional coupling will result. The pawl engaging into the ratchet wheel teeth (see fig. 4-27)

Declassified in Part - Sanitized Copy Approved for Release 2013/10/18 : CIA-RDP80T00246A071100330001-5

Declassified in Part - Sanitized Copy Approved for Release 2013/10/18 : CIA-RDP80T00246A071100330001-5
NO FOREIGN DISSEM

50X1-HUM

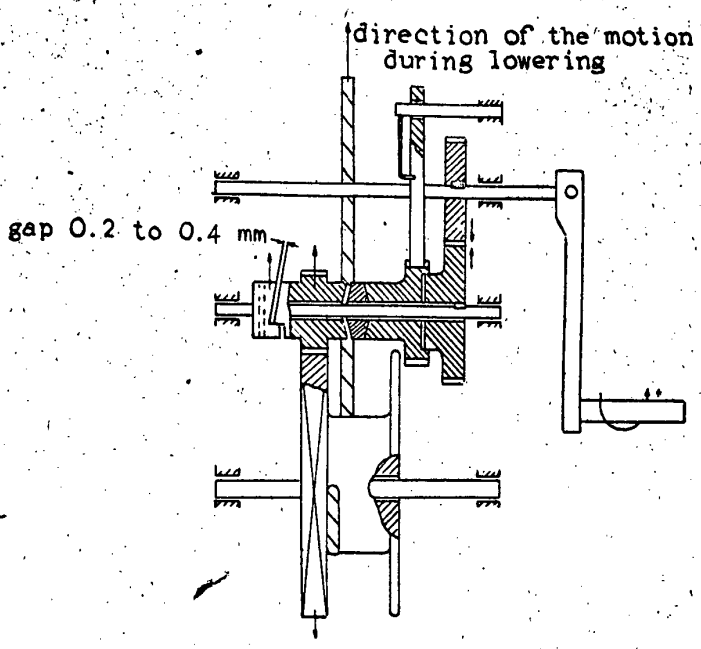

Fig. 4-27. Part of the winch (raising) mechanism.

will not permit the rotation of the entire friction break and the mechanism will not turn. As a result of this , the tower will not be lowered of its own accord.

The motion baking place in the winch at the instant of interrupting the crank rotation is very small and takes place fairly rapidly. Therefore the telescopic tower stops immediately when the turning of the crank is interrupted.

SECRET
NO FOREIGN DISSEM
Declassified in Part - Sanitized Copy Approved for Release 2013/10/18 : CIA-RDP80T00246A071100330001-5

Declassified in Part - Sanitized Copy Approved for Release 2013/10/18 : CIA-RDP80T00246A071100330001-5

50X1-HUM

CHAPTER 5

The radio communication unit electric power supply.

5-1. The block diagram of the power supply and its special features.

1. Power supply block diagram.

The radio communication unit is powered from the mobile power plant mounted on a trailler with a three-phase alternating current 50 cps.,220 V generator. It may also be powered from a three phase alternating current 220 or 380 V power line.

The block diagram of the radio communication unit power supplies is given by figure 5-1.

The voltage from the power plant or from the poer line is brought by cable to an external resceptacle in the cable box above the drivers cabin , and from there to the type BCP-6B selenium rectifier , which is regulated by an autotransformer able to operate on either 220 V or 380 V. The autotransformeris able to regulate the 220 V supply with a power line voltage fluctuation of -25% to +10 % from the nominal voltage.

The selenium rectifier supply the necessary direct current voltages for powering the transmitter , the receivers and the auxilliary equipment.

The radio communication unit contains five rectifiers.

1) The type BCP-36 selenium rectifier for powering the transmitter;

2) Two portable type BC -2 rectifiers for powering the receivers and the remote control unit (B Y);

3) a selenium rectifier for powering some of the supply circuit relays (control line rectifier);

4) the type BC -1 selenium rectifier for charging the

Declassified in Part - Sanitized Copy Approved for Release 2013/10/18 : CIA-RDP80T00246A071100330001-5

Declassified in Part - Sanitized Copy Approved for Release 2013/10/18 : CIA-RDP80T00246A071100330001-5
NO FOREIGN DISSEM

50X1-HUM

storage batteries.

The direct current for powering the receiver and the remote control unit may , beside from the rectifiers , be also obtained from one or two storage batteries , which give 26 to 30 V. The radio van lighting , the pilot lamps ., the signal lamps on the tower and the soldering iron may also be powered from these storage batteries.

The transmitter power supply consists of the BCP-65 rectifier , the transmitter vacuum tube filament transformer block and a separate filament transformer for heating the vacuum tube filament (which is not shown in the block diagram).

The BCP-65 rectifier supplies the transmitter vacuum tube anode , screen grid and control grid circuits as wellas some automatic transmitter tuning circuits ,micriphone circuits and pilot lamps with direct current (see the radio van cable and connecting elements schematic diagram in the appendix) The transmitter vacuum tube filaments are heated with alternating current obtained from the transmitter filament transformer block and from a separate filament transformer. These transformers are located in the lower part of the transmitter rack.

This block is supplied with 220 V three-phase alternating current from the BCP-6 rectifier rack.

Beside this , the alternating current brought in from the BCP-66 rectifier to the transmitter rack also powers the electric motor of the TV-7 transmitter vacuum tube air cooling system and a control line rectifier which are also located in the lower part of the transmitter rack.

The alternating current for powering the other radio communication unit components is conducted from the BCP-66 rectifier to the distribution cabinet.

Two other primary circuits are connected to the distribution

SECRET
NO FOREIGN DISSEM
Declassified in Part - Sanitized Copy Approved for Release 2013/10/18 : CIA-RDP80T00246A071100330001-5

Declassified in Part - Sanitized Copy Approved for Release 2013/10/18 : CIA-RDP80T00246A071100330001-5
NO FOREIGN DISSEM

50X1-HUM

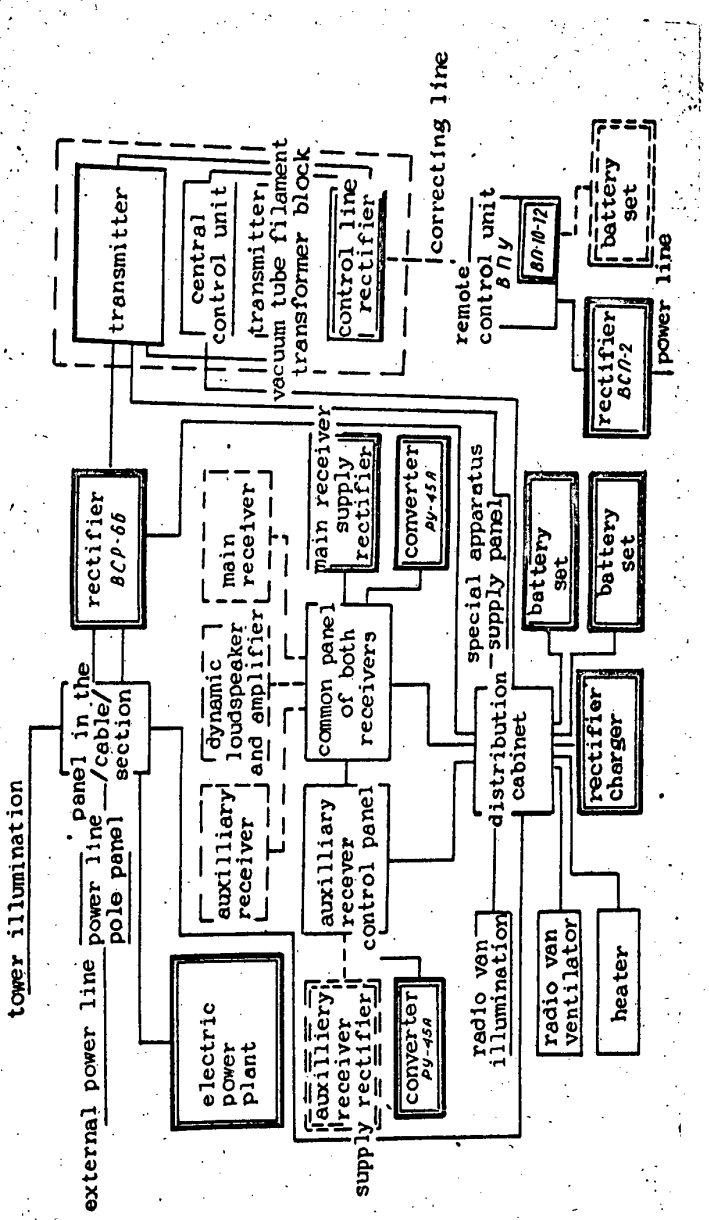

Fig. 5-1/ Block diagram of the mobile radio communication unit power supplies.

Declassified in Part - Sanitized Copy Approved for Release 2013/10/18 : CIA-RDP80T00246A071100330001-5

Declassified in Part - Sanitized Copy Approved for Release 2013/10/18 : CIA-RDP80T00246A071100330001-5
NO FOREIGN DISSEM

cabinet: one circuit connects the 26 V to 36 V from the storage batteries (the wall unit) and the other one ~~туда~~ the 6.3 V. (from a part of the batteries - from 6 cells). The batteries are switched for charging or discharging bymeans of a selector ~~кнопочный~~ switch on the distribution cabinet. The storage batt ery charging current is brought to the distribution cabinet from the BG3-1 charging rectifier.

From the distribution cabinet lead alternating and direct current , obtained from the storage batteries , as well as from a rectifier in the distribution cabinet proper , to the various consumption points , centers etc.).

The receiver may be powered either from 110 V to 120 V alternating current or from the storage batteries.

With the receivers powered by alternating current , the 220 V alternating current is led from the distribution cabinet to two BC -2 ~~выпрямителя~~ rectifiers (to one via the common panel of the receiver , and to the other one via the auxilliary receivercontrol unit) with supply the anodes , screen grids and control grids of the receiver vacuum tubes and the receiver automatic communication channel chuning stepping relay coil,as wellas the anode and the filament of the dynamic loudspeaker vacuum tube.

The voltage of one rectifier is led via the common pannel of the receivers to the main receiver and to the dynamic loudspeaker amplifier ; the voltage of the other rectifier is led via the auxilliary receiver control unit and via the common pannel of both receiver to the auxilliary receiver.

When the receivers are powered by 26 V to 30 V direct current (from the storage batteries) from the distribution cabinet the voltage is led to:

- the main (via the common pannel of both receivers)

and the auxilliary (via the auxilliary receiver unit and via

SECRET
NO FOREIGN DISSEM
Declassified in Part - Sanitized Copy Approved for Release 2013/10/18 : CIA-RDP80T00246A071100330001-5

Declassified in Part - Sanitized Copy Approved for Release 2013/10/18 : CIA-RDP80T00246A071100330001-5
NO FOREIGN DISSEM

the common pannel of both receivers) receivers to supply the vacuum tube filaments and the stepping relay coils of the automatic communication channel tuning system of the receivers;

- two type PY-45A converters (to one via the common panel of both receivers and to the other one via the auxilliary receiver control unit) which supply the receiver vacuum tube anode, the screen grid and the control grid circuits and the dynamic loudspeaker vacuum tube anode.

The voltage of one converter is led to the main receiver and to the dynamic loudspeaker amplifier via the common panel of both receiver , and the voltage of the other converter is led to the auxilliary receiver via the auxilliary receiver control unit and the common panel of both receivers.

Beside this the 6.3 V voltage (from a section of the storage batteries) comes from the distribution cabinet to the dynamic loudspeaker amplifier vacuum tube filament via the common panel of both receivers.

The BC321 rectifier , the electric heater and the radio van ventilator electric motor are powered with 220 V three-phase alternating current with comes from the distribution cabinet.

The radio van illuminating bulbs are supplied with 26 V either alternating current or direct current (from the storage batteries) obtained from the distribution cabinet. In case that no alternating current is avilable , the lighting circuit is switched to the direct current. A transformer in the distribution cabinet steps the 220 V alternating current down to 26 V.

The illumination schematic diagram shows that on the distribution cabinet are two 26 V binding posts to which the soldering iron and the portable lamp may be connected. From

Declassified in Part - Sanitized Copy Approved for Release 2013/10/18 : CIA-RDP80T00246A071100330001-5

Declassified in Part - Sanitized Copy Approved for Release 2013/10/18 : CIA-RDP80T00246A071100330001-5
NO FOREIGN DISSEM

the distribution cabinet the 26 V alternating current power direct current voltage is also led to the signal lights which are , is necessary , mounted on the telescopic tower via the respectacle on the cable box panel.

The respectables foe connecting the soldeering iron to 220 V. are located on the left wall of the radio va cabin.

When the BCP-66 rectifier is not in use , it may be disconnected from the power line by means of a special switch.

The remote control unit may be powered by either alternating current or direct current.

In the first case , the remote control unit is supplied from the BC -2 rectifier which supplies the amplifier vacuum tube anode and filament circuit voltage , the microphone circuit voltage and the pilot lamp and illuminating bulb voltages. The vacuum tube filaments of both amplifiers and the pilot and illuminating lamps are powered with 6.3 V alternating current.

In the second case, the remote control ukit is powered from the storage batteries consisting of three series connected type 4-NKH-45M batteries. The anode voltage for the amplifiers is obtained from a type B -10-12 vibrator converter located in the remote control unit.

When the remote control unit is powered with direct current the 6.3 V supply voltage for the amplifier tube filaments and for the illuminating and pilot lamps is obtained from one half of the storage batteries.

The voltage from the BC -2 or from the storage batteries are led to the remote control unit by means of cables.

The description and operating instructions for the use or the portable power plant are given in a separate manual.

2. The selenium rectifier and their special features.

Declassified in Part - Sanitized Copy Approved for Release 2013/10/18 : CIA-RDP80T00246A071100330001-5

Declassified in Part - Sanitized Copy Approved for Release 2013/10/18 : CIA-RDP80T00246A071100330001-5
NO FOREIGN DISSEM

The rectofication of alternating current for supplying the various communication unit circuits is performed by selenium rectifiers , as mentioned already above.

The selenium rectifier element is a nickel plated steel or an aluminium disk with an applied thin selenium layer. The selenium layer is covered with a low melting alloy which acts as the second electrode (the first electrode is the steel or aluminium disk. A thin split resilient washer presses against the low melting alloy. The positive potential is always on the side of the resilient washer.

To reatify high voltages , these elements are connected in series and for large current they are connected in parallel. The elements are assembled on insulated steel studs. Selenium elements assembled in such a way are celled selenium columns.

The radio communication unit uses both three-phase and single phase rectifiers. Both kinds are assembled in a bridge connection.

The selenium elements heat during operation and if not sufficiently cooled they may heat beyond the permitted temperature. The limiting temperature at which the selenium rectifier may safely operate is +78° Centigrade. In the radio communication unit the selenium rectifier must be able to operate with ambient temperatures as high as +60°C. Therefore in order to prevent the selenium rectifier from exceeding +75° C under such high ambient temperature conditions, forced air cooling is used in the BCP- 6(transmitter rectifier and in the BC3-1 charging rectifier. The rectifiers for supplying the receivers and the control line rectifiers do not haveforced air cooling ; they are cooled by natural air convection.

Then the rectifier are just turned on , that is in cold state , they usually give a slightly lower voltage. After 10

Declassified in Part - Sanitized Copy Approved for Release 2013/10/18 : CIA-RDP80T00246A071100330001-5

Declassified in Part - Sanitized Copy Approved for Release 2013/10/18 : CIA-RDP80T00246A071100330001-5
NO FOREIGN DISSEM

50X1-HUM

to 15 minutes of operation this voltage returns to normal. When the ambient temperature drops , the rectified voltage of the selenium rectifiers is somewhat lowered too.

After long service of the selenium rectifiers their resistance gradually decreases and as a result of this the voltage decreases also. This selenium rectifier property is called "aging". This aging becomes more intensive with improper operation of the rectifiers , e.g. overloads during short circuits and insufficient cooling. In other words , any increase in temperature of the selenium rectifiers above 75°C accelerates their aging. The aging proces is irreversible , Aged rectifiers which give rectified voltages below normal must be replaced with new ones. For a limited period , the voltage of aged rectifier may be raised at the expense of raising the alternating current. This has been taken into account in the design of the BCP-66 rectifier and special transformer taps with the inscription " "("aging" are provided for raising the voltage. Under normal and regular operating conditions the life of the selenium rectifiers is 10.000 hours.

The humadity of the ambient air has a considerable effect on the operation of the selenium rectifiers , particularly during a longer rest period. The lowered resistance of the separate sections of the working surface of the elements causes partial breakdowns of the selenium layer when the rectifier is tuned on. The selenium melts at the breakdown locations and ceases yo conduct the current. The breakdown is thereby "healed" , but the ptesence of several such points result in a reduction of the acti ve surface and thus leads to an increase of the internal resistance and toa drop in the rectifier voltage.

SECRET

NO FOREIGN DISSEM

Declassified in Part - Sanitized Copy Approved for Release 2013/10/18 : CIA-RDP80T00246A071100330001-5

Declassified in Part - Sanitized Copy Approved for Release 2013/10/18 : CIA-RDP80T00246A071100330001-5
NO FOREIGN DISSEM

When the selenium column remains a longer time in the state of electrical "devorming" , deforming of the selenium elements takes place with which results in a lowered reverse current resistance. When the selenium rectifier has been out of service for a long time , large reverse courents may appear after the rectifier is placed back in service and the fuses may burn out. Within two three minutes the selenium column regain their rectifying ability and start operating normaly. The rules for operating the selenium rectifiers after a longer idle period are given in the second part of this manual under"instructions for the operation of the radio communication unit"

5-2. The type BCP-66 selenium rectifier.

1. General

The BCP-66 selenium rectifier supplies rectified voltages to the transmitter vacuum tube anode , screen grid and control grid circuits as well as to some of the transmitter automatic tuning circuit , the microphone circuit and the pilot lamp circuits.

The BCP-66 rectofier unit consists of five rectifiers operating with three-phase bridge circuits which supply the following voltages and currents:

1) 26 V. 5 amp - for supplying the contactor and relay coils , the microphone circuit , the transmitter automatic tuning as well as the pilot lamp on the BCP-66 panels and in the central control apparatus;

2) -800 V. 0,75 amp. - for supplying the transmitter vacuum tube control grid bias circuits;

3) +300 V. 0,75 amp. - for supplying the anodes and screen grid of the first and third tripler and the screen

Declassified in Part - Sanitized Copy Approved for Release 2013/10/18 : CIA-RDP80T00246A071100330001-5

Declassified in Part - Sanitized Copy Approved for Release 2013/10/18 : CIA-RDP80T00246A071100330001-5
NO FOREIGN DISSEM

grid of the first power amplifier tube as wellas for supplying the anodes and screen grids of the audio frequency section preamplifier vacuum tube.

4) 600 V , 0.6 amp. - for supplying the first power amplifier vacuum tube anode and the modulator vacuum tube screen grids;

5) 1.350 V , 1.5 amps. - for supplying the anodes of the second and output power amplifier and the modulator vacuum tubes.

The anode and screen grid of the crystal oscillator doubler vacuum tube and the anode of the bridge amplifier vacuum tube of the vacuum tube voltmeter are supplied from a stabilized 300 V , 0.03 amp. rectifier. The stabilization is accomplished by means of gaseous voltage regulators to which a potentiomal of 600 V is applied from the rectifier.

All rectifier transformers are powered with 220 V three-phase alternating current. The selenium columns are cooled by an airstream provided by ventilators.

2. The schematic diagram.

Block 5 (input circuit). The alternating current voltage from the power plant is applied to the contacts 58 , 59 , 60 of the terminal board 311 on the cable box section (see the type B P-66 rectifier schematic diagram in the appendix). In this methode of powering the radio communication unit (from the power plant) the selector switch 302 on block 6 (see fig. 6-2) must be in the "APPEAR" ("power plant") position and the selector switch 301 , located inside the block , must be in the "220 V " position. Thereby the autotransformer T301 is delta connected. The voltage regulated by the selector switch 310 is led to the output contacts 38 , 39 , 40 of the block 5. The

Declassified in Part - Sanitized Copy Approved for Release 2013/10/18 : CIA-RDP80T00246A071100330001-5

Declassified in Part - Sanitized Copy Approved for Release 2013/10/18 : CIA-RDP80T00246A071100330001-5
NO FOREIGN DISSEM

voltage of all phases can be checked with the voltmeter M301 by means of the selector switch 305.

When the radio communication unit is powered from an external power line the selector switch 302 must be in the " "("power line") position. The voltage is then applied to the contacts 62 , 63 , 64 of the terminal board 311 or the rectifier rack and is led from there to to contacts 62 , 63 , 64 of the block. Two possibilities may arise , since the power line voltage may be either 220 V or 380 V.

When the external power line voltage is 220 V then the selector switch 301 must be in the "220V" position just as in case of the power plant , and when the power line voltage is 380 V the selector switch 301 must be in the"380 V" position. In the latter case the autotransformer T301 winding is star connected and the voltage on the contacts 38 , 39 , 40 is again 220 V.

The selector switch 310 Mx is used for voltage regulation of the autotransformer output to a constant value of 220 V. i.e. on the contacts 38 , 39 , 40 of the block (or on the contacts 38 , 39 , 40 of the terminal board T311) with a power line fluctuation of -25 % to +10 % i.e. with a change in voltage from 165 to 240 volts or from 285 to 420 volts. The voltage regulation is accomplished by reconnecting the autotransformer winding taps in all three phases with the selector switch 310 , whereby the transformation ratio is changed. To be able to change the taps under load without shutting the transformer down and without arcing , are supressor resistor R309-1 , R309-2 , R309-3 (see fig. 5-2) are connected between the movable contacts of the selector switch.

The selector switch 310 , 305 , 302 knobs are brought out to the front side of the block 5 panel , but the selector

Declassified in Part - Sanitized Copy Approved for Release 2013/10/18 : CIA-RDP80T00246A071100330001-5

Declassified in Part - Sanitized Copy Approved for Release 2013/10/18 : CIA-RDP80T00246A071100330001-5
NO FOREIGN DISSEM

switch 301 is mounted inside the block to prevent its accidental switching which might result in putting the radio communication unit out of service. With the radio communication unit powered from a 380 V. power line and the selector switch 301 in the "220 V" position the voltage applied to the contacts 38 , 39 , 40 will be 380 V while when the apparatus connected to them is designed for only 220 V. With the selector switch 301 in the "380 V" position and a power line voltage of 220 V , the voltage on the contacts 38 , 39 , 40 and on the voltmeter 301 will be 127 V.

From contacts 38, 39 , 40 of the block 5 the three-phase current is applied to the output terminals 38 , 39 , 40 of the rectifier as well as to contacts A , B , C of the block 3 (see the type BCP-66 rectifier schematic diagram). The voltage is led over the fuser B301 to the connector 301 and across the contacts 53 , 54 , 76 of the same block. From these contacts the current flows to the electric motor M301 of the BCP-66 rectifier rack ventilator and to the terminals 55 , 56 , 57 of the rectifier rack terminal board T311 from which the current is led to the transmitter filament transformer and to the electric motor of the 76 transmitter vacuum tube cooling system. Simultaneously the current from contacts 71 , 72 , 73of the block 3 is led to the contacts 71 , 72 ,73 of the block 4 as well as over the 15 amp. fuseem B308 and the contacts 75 , 72 , 74 of block 3 to the contacts 75 , 72 , 74 of block 2.

The three phase 220 V current is first applied to block 3 and there it branches out to blocks 2 and 4. In block 4 the three-phasecurrent from contacts 71 , 72 , 73 , is led over the fuse B392and the switch 317 to transformer T305. The primary winding of the transformer T305 as well as the

Declassified in Part - Sanitized Copy Approved for Release 2013/10/18 : CIA-RDP80T00246A071100330001-5

Declassified in Part - Sanitized Copy Approved for Release 2013/10/18 : CIA-RDP80T00246A071100330001-5
NO FOREIGN DISSEM

primary windings of the other transformer are delta connected. From the secundary winding of transformer T305 the voltage is applied to the bridge connected three-phase rectifier 305 which gives a rectified voltage of 20 v. All ~~pikkmt~~ pilot lamps , contactor coils and some rectifier BCP-66 and transmitter automatic control circuits are supplied with this voltage.The +26 V. voltage is led to the control board T302 (for checking the rectified voltages of the BCP-66 rectifier) and from contact 91 of the block 4 it is simultaneously led to the terminal 61 of the terminal board T311 and to contact 91 of the block 3; from contact 91 of the block 3 the +25 V voltage flows to the pilot lamp " " ("power line") on the panel of block 3. The 26 V. rectifier is energized during the operation of the transmitter.When the transmitter is not operating and the charging rectifier and the electric heater or illumination are operating , then the 26 V rectifier may beturned of by the switch 317.

Declassified in Part - Sanitized Copy Approved for Release 2013/10/18 : CIA-RDP80T00246A071100330001-5

Declassified in Part - Sanitized Copy Approved for Release 2013/10/18 : CIA-RDP80T00246A071100330001-5
NO FOREIGN DISSEM

50X1-HUM

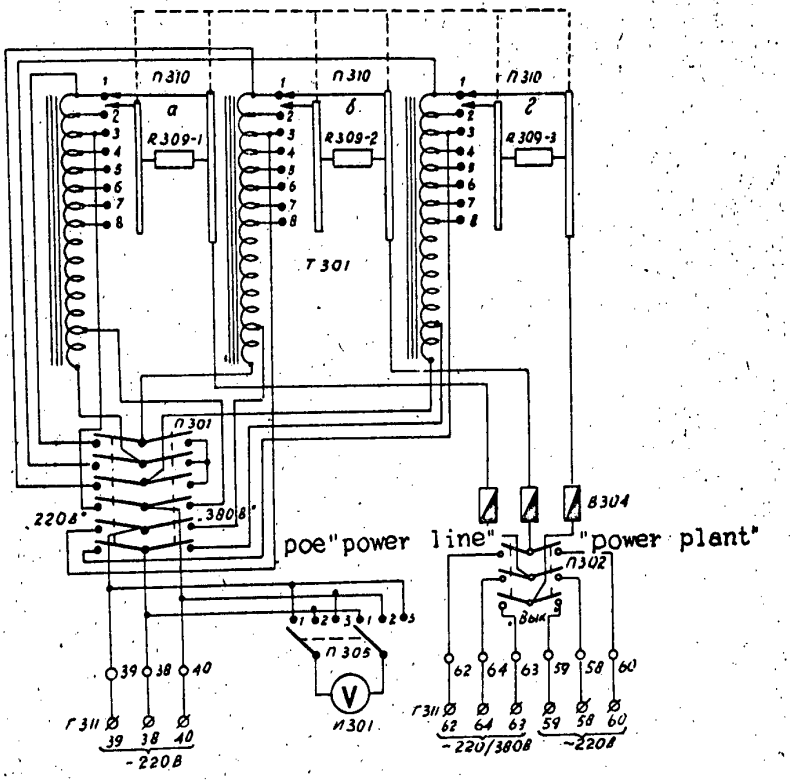

Fig. 5-2. Schematic diagram of the BCP-66 rectifier block 5.

NO FOREIGN DISSEM
Declassified in Part - Sanitized Copy Approved for Release 2013/10/18 : CIA-RDP80T00246A071100330001-5

Declassified in Part - Sanitized Copy Approved for Release 2013/10/18 : CIA-RDP80T00246A071100330001-5
NO FOREIGN DISSEM

50X1-HUM

Automatic starting of the BCP-66 rectifier. The +300 V. -300 V. , 600 V. and 1.350 V rectifiers are turned on automatically by means of a contactor. The three-phase solencid type contactors used in the BCP-66 rectifier have a special step type connection:when first connected to the power source the voltage is applied only to a part of the solencid winding. The large current flowing throught the solencid sets up a magnetic flux which is sufficient to move the armature. When the armature completes its movement its auxilliary contactsenergize a complimentary solencid coil winding , which may easily be seen on the schematic diagram. As a result of this , a smaller current will flow on the solencid coil once the contactor closed (This current is sufficient to keep to armature closed)

Turning on of the rectifier is accomplished by more pressing by the radio communication unit starting button on the central control panel. Figure 5-3 shows the schematic diagram of the radio communication unit (transmitter) starting control circuit. Turning on the transmitter means turning on The BCP-66 rectifier. In turning on the rectifier , the following takes places after pressing the radio communication unit (transmitter) starting push button on the central control panel, the transmitter vacuum tube filaments are energized and after two minutes (the time necessary to bring the -76 vacuum tube cathodes up to temperature) the +300 V rectifiers are turned on and immediately following this the 600 V and 1350 V rectifiers are turned on as well. The time delay (the high voltages are turned on two minutes after the vacuum tube filaments have been energized) is obtained from an electro-mechanical "(time delay") automat which will be described in the transmitter connection description.

The turning on of the transmitter (and thereby also of

SECRET
NO FOREIGN DISSEM
Declassified in Part - Sanitized Copy Approved for Release 2013/10/18 : CIA-RDP80T00246A071100330001-5

Declassified in Part - Sanitized Copy Approved for Release 2013/10/18 : CIA-RDP80T00246A071100330001-5

50X1-HUM

the BCP-66 rectifier) is accomplished by pressing the push-button 405 on the central control panel Y. The voltage +26 V coming from the distribution cabinet (terminal 52) to the transmitter rack (to terminal 52 of terminal board 901) is led from there across the push button 405 on the central control panel Y, over contacts 43 of terminal board 405 in the central control unit and in the transmitter rack, over filament interlocking contacts 6 of the electro-mechanical " " ("time delay") automat 901, over terminal 43Ż of the transmitter rack terminal board 901 and of the BCP-66 rectifier rack terminal 311 to the contactor 301 coil and energized it. In this way the 220 V potential is also led across contractor 301, over contacts 53, 54, 76 of block 3 and terminals 55, 56, 57 of terminal 311 of the BCP-66 rectifier rack and of terminal board 901 of the transmitter filament transformer and simultaneously to the electric motor M302 of the transmitter vacuum tube -76 air cooling system ventilator. The 2.800 r.p.m. electric motor M302 brings the electromechanical " " ("time delay") automat 901 into motion. The schematic diagram of this automat is given by figure 5-3. A double worm gear reduction 1 and 2 with a total speed reduction of $(78 : 1)^2 = 6084 : 1$ is coupled to the motor shaft. The shaft 3 therefore rotates at $\frac{2800}{6084} = 0.46$ r.p.m. (in other words, the shaft and its gear 3 make one complete revolution in two minutes and ten seconds). The gear 3 has 28 teeth and the gear 4 has the same diameter and modulus (diametral pitch) as the gear 3 has, but two teeth are cut out of it. The gear 4 can mesh the gear 3 only when the realay 5 armature closses, since the shaft of gear 4 is fastened to the armature of this relay In the place where the teeth have been cut out, the gear 4 has a finger 8.

Declassified in Part - Sanitized Copy Approved for Release 2013/10/18 : CIA-RDP80T00246A071100330001-5

Declassified in Part - Sanitized Copy Approved for Release 2013/10/18 : CIA-RDP80T00246A071100330001-5
NO FOREIGN DISSEM

When the gear 3 does not mesh the gear 4 then the gear 3 is turned back by the spiral spring 9 so that the finger 8 assumes the position indicated in figure 5-3 in the solid lines (the starting position). After pressing the push-button 405 the electro-magnetic relay 5 closes its armature and the gear 4 meshes into 4 and commenses to rotate clockwise until the cut out teeth will disengage it.

When the gear stops the finger assumes the dotted position shown in figures 5-3 and it closes the contacts 7 thus energizing the contactor 302 , as is evident from the schematic

Fig. 5-5. Schematic diagram of the radio communication unit (transmitter) connections- schematic diagram of the type BCP-66 selenium rectifier.

diagram. The +26 V voltage comes in this case from contact 43 of the terminal board 405 of the central control unit to terminal board 311 of the BCP-66 rectifier rack and is led over contacts 93 and 89 of the block

Declassified in Part - Sanitized Copy Approved for Release 2013/10/18 : CIA-RDP80T00246A071100330001-5

Declassified in Part - Sanitized Copy Approved for Release 2013/10/18 : CIA-RDP80T00246A071100330001-5
NO FOREIGN DISSEM

over contact 89 of block 3 to the contactor 302 coil winding. The other end of the contactor 302 is connected over terminal 41 of the rectifier rack terminal board 311 and of the terminal board 901 of the transmitter rack, contact 7 of the " " ("time delay") automat 901, over a number of interlocking contacts (interlocking contacts of the 7 transmitter vacuum tube forced air cooling system, transmitter rack side door interlocks) over contacts 102 of the rack and first transmitter section terminal board 105, across the toggle switch 103 (for connecting the high voltage) across the selector switch 104 contacts and the contacts of the relay 104 (in the automatic communication channel tuning apparatus) to the transmitter frame, i.e. to the -26 V connection. The toggle switch 103 is used as a high voltage switch. As is evident from the schematic diagram, that the opening of any contacts leads to the disconnection of the high voltage.

When the radio communication unit is turned off, the relay 5 is deenergized and the gear 4 will fall out of mesh (disengage), contacts 7 will open and the finger 8 together with gear 4 will be returned to their original position by the spring 2.

The electric motor M302 of the transmitter vacuum tube 7 forced air cooling system has its direction of rotation limited to the prescribed direction. This direction of rotation is given by the arrows on the gear 3 and 4 in the schematic diagram. If the phase rotation of the alternating current were reversed, the electric motor M302 would rotate backwards and this would result in the destruction of the whole "time delay" automat 901. To protect the automat against such an occurrence the mechanism is equipped with a complimentary set of contacts 6 which remain closed when the

Declassified in Part - Sanitized Copy Approved for Release 2013/10/18 : CIA-RDP80T00246A071100330001-5

Declassified in Part - Sanitized Copy Approved for Release 2013/10/18 : CIA-RDP80T00246A071100330001-5
NO FOREIGN DISSEM

direction of rotation is correct. However , if the direction of rotation is reversed , the finger 8 will open the contacts 6 and thus deenergize the contactor 301 and the electromagnetic relay 5 of the"time delay" autcmat. The relay armature will open and the gear 4 will return to its original position and the contacts 6 will reclose. Thus when the phase rotation of the motor 302 , and therefore its direction of rotation are incorrect , the high voltage will not be connected.In such a case any two phase conductors must be reversed on the panel on the cable box section above the driver's cabin.

The contactor 302 connect the primary transformer T304 winding , whose secondary winding supplies the rectifier 303 and 304 which supply the +300 V and -300 V potentials. The -300 V potential supplies the transmitter grid bias circuits and the 600 V and 1,350 V potentials cannot be brought to the transmitter if no bias is in the transmitter, This is achieved by having the relay 303 control circuit interlocked by the auxilliary contacts of relay 308 which is energized by the -300 V potential. The control circuit of the contactor 303, which connects the 600 V and 1.350 V rectifier , contains a number of auxilliary relays and contacts with safeguard the rectifier , the trandmitter and the attending personel. This circuit is completed over the following contacts: + 26 V coming from the rectifier is led over contacts 89 to the contactor 302 , over its auxilliary contacts to the contacts of relay 308 , from there over contacts 63 to the toggle switch 313 located in the block 1.and finally over the overload relay 310 contacts , over contacts 262 of the block 1 , over contact 262 of the block 4 , over contact of the 600 V over board relay 309 located in block 4 , over contact 69 in the block 4 , and in the block 3 to the coil of contactor 303

Declassified in Part - Sanitized Copy Approved for Release 2013/10/18 : CIA-RDP80T00246A071100330001-5

Declassified in Part - Sanitized Copy Approved for Release 2013/10/18 : CIA-RDP80T00246A071100330001-5
NO FOREIGN DISSEM

50X1-HUM

which connects the primary windings of the transformer T303 and T302 , whose secondaries supply the 600 V 302 rectifier and the 1.350 V 301 rectifier.

This way all transmitter supply voltages are connected by pressing one push button for turning on the radio communication unit. The following sequence takes place: first the transmitter vacuum tube filament are turned on together with the BCP-6 rectifier ventilator motor and with the transmitter 7 vacuum tube forced air cooling system ventilator motor; after two minutes the voltage +300 V and -300 V are connected and when these are on , the 600 V and 1,350 V volrages are connected.

The transmitter(and the BCP-6 rectifier) are also turned of from the central control unit by pressing the radio communication unit disconnecting push-button (406). During the disconnecting all voltage are turned off simultaneously.The three phase contactor-selector 304 which is connected in the primary winding circuit of the transformer T302 in the block 2 is used for reducing the 1,350 V potential to 750 V. This is accomplished by having the primary winding of this transformer delta connected for 1.350 V (with the contactor selector deenergized) and when the contactor selector is energized it reconnects the primary windinginto a star connection which redults in a lowered rectified voltage of 750 V to 800 V. The control circuitof the contactorselector is brought out to the terminal 42 of the BCP-6 rectifier terminal board 311 and from there to the central control unit. The contactor is controlled by a toggle switch with the inscriptions " "("power") , "25 %" - "100 %" with the toggle switch in the "25 %" position , the voltage is

SECRET
NO FOREIGN DISSEM
Declassified in Part - Sanitized Copy Approved for Release 2013/10/18 : CIA-RDP80T00246A071100330001-5

Declassified in Part - Sanitized Copy Approved for Release 2013/10/18 : CIA-RDP80T00246A071100330001-5
NO FOREIGN DISSEM

reduced , i.e. the armature of the cintactor-selector 304 is c;osed and the primary winding of the transformer T302 is star connected; with the toggle switch in the "100 %" position the contactor selector coil is deenergized and the transformer is delta connected.

Overload protection of the BCP-6 rectifer circuit. The three phase current circuits of the BCP-6 rectifiers are protected against overload by glass fuses. Their locations are evident from the schematic diagram of this rectifier. Two type of fuses are used: The type fuses with threaded heads made of ceramic , and the type cylindrical fuses. The fuses B301 and B308 (type) and the fuses B302, B309 ,B310 , and B311 (type) are equipped with neon pilot lamps which light whrn the fuse burns out.To limit the current flow through the neon bulbs , protective resistors are connected in series with them.

The fusesm B310 and B311 protect the rectified current +300 V and -300 V (303 , 304)circuits. The 600 V 302 and the 1,350 V 301 rectifiers are protected against overloads by special averload relays 309 and 310 , whose coil windings are connected in the negative lead of the rectified current circuits. At current which exceed the nominal rectified current by 50 % , the relay armatures opens its contacts which are connected in series with the coil of the contactor 303 which connects the primary windings of the transformers T303 and T302. The relay 309 closes when the current is 0,8 to 1,0 amps. , and the relay 310 closes when the current is 2.03 to 2,47 amps.Both overload relays have two coil windings it each one with one winding designed tooperate the relay , then the relay connects to its second winding the 26 V

SECRET
NO FOREIGN DISSEM
Declassified in Part - Sanitized Copy Approved for Release 2013/10/18 : CIA-RDP80T00246A071100330001-5

Declassified in Part - Sanitized Copy Approved for Release 2013/10/18 : CIA-RDP80T00246A071100330001-5
NO FOREIGN DISSEM

50X1-HUM

voltage and remains energized even after the contactor 303 disconnects the high voltage. The closing of the overload relays is signalled on the front panels of the block under the appropriate inscriptions. To be able to contact the high voltage after the overload relay closes, it is necessary to turn off and then again to turn on the toggle switch with the inscription " "("high voltage" whereby the second (holding) winding of the overload relay coils will be deenergized and their armatures and contacts will return to their original position, indicated on the schematic diagram. The same result may be achieved by opening and reclosingthe toggle switch 313 (" "("emergency") on the panel of the block 1.

In case that the temperature of the 25 V rectifier 305 selenium elements should for any reason rise above 75° C, then this rise is signalled by the pilot lamp 309 (" ") ("overheating") which is located in the block 4 and is turned on by the termal relay 312.

Emergency menual connection of the rectifier. The rectifier is also designed for menual turning on, which, however it is permitted to use only in extreme cases when the automatic system failed in front line situations. The manual connection is achieved by means of the power switches 314, 315 and 316 which are connected in parallel to the respective contactors 301, 302, and 303. The switches must be turned on only in the following seq ence: first turn on the switch 314 (filament heating), and after two minutes turn on the switch 315 which connects the + 300 V and the -300 V rectifiers and at last turn on the switch 316 which connects the 600 V and the 1.350 V rectifiers, When shutting down the radio communication unit the receivers sequency is necessary. If these

SECRET
NO FOREIGN DISSEM
Declassified in Part - Sanitized Copy Approved for Release 2013/10/18 : CIA-RDP80T00246A071100330001-5

Declassified in Part - Sanitized Copy Approved for Release 2013/10/18 : CIA-RDP80T00246A071100330001-5
NO FOREIGN DISSEM

50X1-HUM

sequences are not maintained the transmitter vacuum tubes will be damaged. It is necessary to bear in mind that when the rectifier is turned on manually , the overload protectionof the 600 V and 1,350 V rectifiers does not function and that the pilot light signals do not works eother. At the same time the transmitter door interlocks and the air cooling interlocks do not work.

With the BCP-6 rectifier connected manually it is imperative to turn off the high voltage with the power switch 316 before using the automatic communication channel tuning and only after the tuning is completed to turn on the high voltage.

The 26 V, 5 amp. rectifier. The rectifier is located in the block 4. The rectifier schematic diagram is given by figure 5-4. The alternating current is applied to the contacts 71 , 72 , 73 of the block and from there is led across the fuse B302 , the switch 317 to the primary winding of the three phase transformer T305. The secondary winding supplies the three phase bridge connected rectifier 305.

The +26 V voltage is led over the terminal 91 to the terminal 61 of the terminal board 311 in the BCP-6 rectifier rack.

The 26 V rectified voltage supplies the consumption circuits without filtration , since the 300 cps. ripple frequency does not effect the operation of the transmitter,

When a fuse burns out in one of the phases of the alternating current , the rectified current voltage will drop to 20 V. Its ripple will increase to such a degree that some of the relays (e.g. the reception-transmission relay) will chatter. When unloaded , or with a small load , the rectifier voltage may be as high as 30 V.

SECRET
NO FOREIGN DISSEM
Declassified in Part - Sanitized Copy Approved for Release 2013/10/18 : CIA-RDP80T00246A071100330001-5

Declassified in Part - Sanitized Copy Approved for Release 2013/10/18 : CIA-RDP80T00246A071100330001-5
NO FOREIGN DISSEM

50X1-HUM

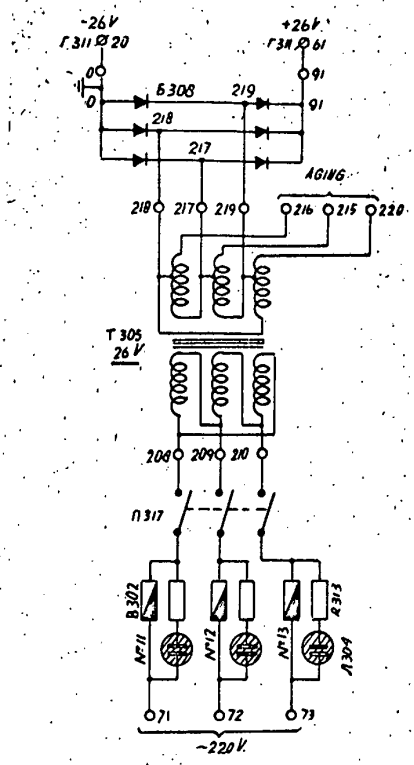

Fig. 5-4. The schematic diagram of the 26 V redtifier.

The voltage may be checked with a portable voltmeter by connecting it to the jacks in the terminal board 302.

The 300 V and the +300 V, 0.75 amp. rectifiers. The -300 V and the +300 V , o,75 amp. rectifiers are located in the block 3. The schematic diagram of these rectifiers is given by figure 5-5. Both rectifiers are turned on simultaneously by the contactor 302. The alternating current flows across the contacts 76-78 , 54-79, 56-80 of this connector and from there to the primary winding of the transformer 302. The two secondary windings of this transformer supply the three-phase bridge connected rectifiers 304 and 303.

Both rectifiers are alike. The only difference is in the fact that the filter choke coil is connected in one of the rectifiers in the negative lead and in the other transformer

Declassified in Part - Sanitized Copy Approved for Release 2013/10/18 : CIA-RDP80T00246A071100330001-5

Declassified in Part - Sanitized Copy Approved for Release 2013/10/18 : CIA-RDP80T00246A071100330001-5
NO FOREIGN DISSEM

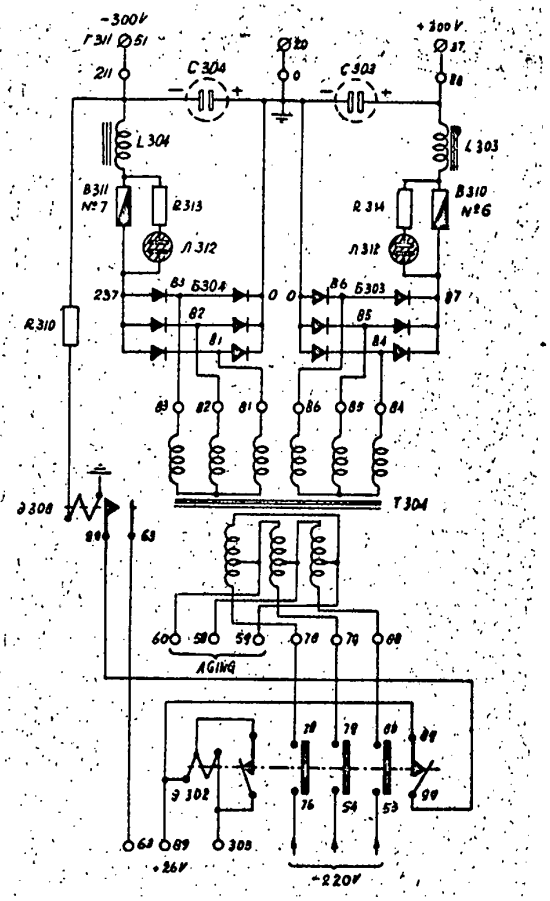

Fig. 5-5. The schematic diagram of the -300 V and the +300 V rectifiers.

It is in the positive lead of the rectified voltage.

The ripple frequency of the rectified voltage directly on the rectifier is 300 cps. and the amplitude about 6 % of its nominal value. To reduce the ripple , filters of the T/2 type , consisting of the chokes L303 and L304 and a set of condensers C303 and C304 , are connected in the rectifier circuit. The chokes have an inductance of 2,5 Hy at o,6 amps. and each set of condensers has a total capacity of 60 uF. The filters are designed to smooth out the 300 cps. ripple frequency. The 50 cps. frequency will pass the filter with a small smooting effect and , should it get into the rectifier circuit , it will cause hum of the transmitter

SECRET
NO FOREIGN DISSEM
Declassified in Part - Sanitized Copy Approved for Release 2013/10/18 : CIA-RDP80T00246A071100330001-5

Declassified in Part - Sanitized Copy Approved for Release 2013/10/18 : CIA-RDP80T00246A071100330001-5
NO FOREIGN DISSEM

50X1-HUM

The 50 cps. frequency may appear in the rectified current when an assymmetrical three-phase voltage is apllied from the power line , e. g. when one of the fuses burns out ,etc. usually with a reduced voltage in one of the phases.

The -300 V rectifier 304 voltage is brought out to the terminal 51 of the BCP-6 rectifier terminal board 311 via the contact 211 on the block , and the +300 V rectifier 303 voltage is brought out to terminal 37 af the same terminal board(311) via the contact 88 on the block.

The -300 V rectifier supplies the relay 308 (interlocking relay) , whichconnects the contactor 303 for turning on the 600 V and 1,350 V rectifiers , via the dropping resistor R310. The minus 300 V is used in the rectifier for supplying the negative control grid bias for the transmitter vacuum tubes. Because the various vacuum tubes require a different bias voltage , the 300 V bias is applied to a voltage divider from which the various voltages are tapped. The voltage divider is located in the first transmitter section.

The +300 V and -300 V rectifiers are protected against overloads and against short circuit currents by the fuses ~~B3~~ B310 and B311 ~~&~~x in the rectified current circuits. The neon lamps 312 connected in series with the current limiting resistors R313 , signal the burning out of the fuses.

The rectifier voltage may be checked with the portable voltmeter which may be plugged into the jacks of the terminal board 302 on the block 4.

When the selenium columns age , the transformer taps may be reconnected in agreement with the notation on the schematic diagram figure 5-5.

The 600 V, 0,6 amp. rectifier. The 600 V. 0,6 amp. rectifier is located in block 4 , and is used for supplying the screen grids of the modulator vacuum tubes Y-80 and the

SECRET
NO FOREIGN DISSEM
Declassified in Part - Sanitized Copy Approved for Release 2013/10/18 : CIA-RDP80T00246A071100330001-5

Declassified in Part - Sanitized Copy Approved for Release 2013/10/18 : CIA-RDP80T00246A071100330001-5
NO FOREIGN DISSEM

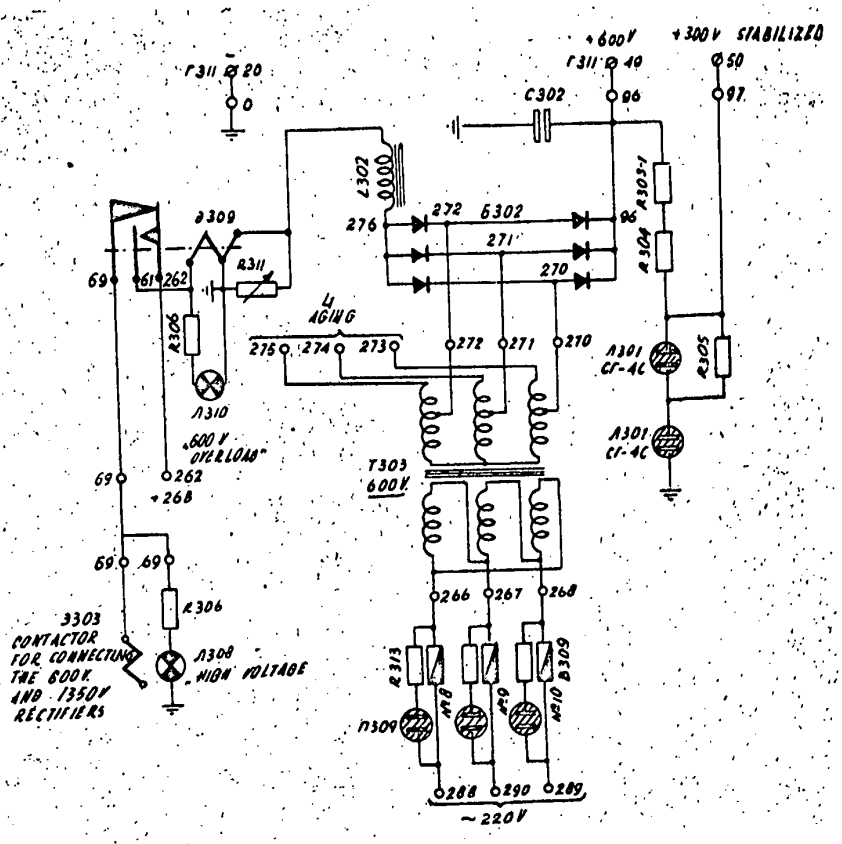

Fig. 5-6: The schematic diagram of the 600 V rectifier.

anodes of the first power amplifier vacuum tube Y-32 in the high frequency section. The schematic diagram of the rectifier is given by figure 5-5. The alternating current is led across the contacts 288 , 289 , 290 of the block and across the fuses B309 to the primary winding of the transformer T303 The secondary windings of the transformer supplies the three-phase bridge connected rectifier 302.

The smoothing filter is of the T/2 type. The filter chokes have an inductance of 2.3 Hy at 0,6 amp. and the condenser set C302 has a total capacitance of 18 uF at a 600 V working voltage. All that was mentioned about the operation of the 300 V rectifier applies also to this rectifier.

Declassified in Part - Sanitized Copy Approved for Release 2013/10/18 : CIA-RDP80T00246A071100330001-5

Declassified in Part - Sanitized Copy Approved for Release 2013/10/18 : CIA-RDP80T00246A071100330001-5
NO FOREIGN DISSEM

The +600 V. voltage is led across the contact 96 of the block to the terminal 49 of the SCB- 6 rectifier rack terminal board 311 and from there by cable to the terminal 49 of the transmitter rack terminal board 901.

Istead of by fuses , the 600 V rectifier is protected against overload by a special overload relay 309 ,which , when it closes , interrupts with is contacts the contactor 303 coil control circuit. As is evident from the schematic diagram figures 5-6 , the relay coil is connected in the negative lead of the rectifier. The value of the current which will operate the relay is determined by the shunting resistror R311. When the overload relay operates its contacts 262 and 61 connect a thin holding winding of this relay coil to the 26 V line (see fig. 5-6). Simultaneously with this the pilot lamp 310 will light.

The voltage can be checked with a portable voltmeter which is plugged into the respective jacks on the terminal board 302.only one half of the rectified voltage is brought out to the jacks from the resistor R303-1 of the voltage divider (R303 andR303-1) mounted in the BCP-6 rectifier rack (see the schematicdiagram of the BCP-6 rectifier). When checking the voltage the voltmeter must read 300 V which corrresponds to a voltage of 600 V on the 600 V rectifier.

The 600 V rectifier is protected against overloads and short circuits in the primary winding by the fuses B309 with the neon pilot lamps 309.

The 300 V, 6,63 amp. stabilized voltage. The 300 V stabilized voltage is used for supplying the anode and screen grid of the crystal oscilator-doubler vacuum tube 6 6C and the anodes of the vacuum tube voltmeter bridge amplifier tube 6H8C. The stabilzing is accomplished by means of two type CP-40 gashes voltage regulator tubes connected in series. Each voltage regulator C -4C permits the stabilizing of 150 V. so that

Declassified in Part - Sanitized Copy Approved for Release 2013/10/18 : CIA-RDP80T00246A071100330001-5

Declassified in Part - Sanitized Copy Approved for Release 2013/10/18 : CIA-RDP80T00246A071100330001-5

two series connected voltage regulators give a stabilized voltage of 300 V to 320 V. The voltages applied to the stabilizer from the 600 V rectifier across the load resistors R304-1 and R304 (see fig. 5-6) The resistor R305 is connected in parallel to the electrode of one of the voltage regulators 301 and is used to assist the firing of the other voltage regulator. The stabilized voltage is brought out to the control terminal board of the block 4 and to the contact 97 of the block and from there to the terminal 50 of the BCP-6 rectifier rack terminal board board 311.

The stabilized voltage is held within the limits of ±2% with a change in the power line voltage of ±10%.

The voltage can be checked by means of a portable volt meter plugged into the respective jacks of the terminal board 302.

The 1,350 V , 1.5 amps. rectifier. The 1.350 V , 1.5 amps. rectifier supplies the anodes of the second and output power amplifier (the fifth and sixth stages) vacuum tubes of the high frequency section and the modulator tubes. The schematic diagram of the rectifier is given by figure 5-7. The selenium columns of the rectifier 301 are located in two blocks - 1 and 2. Each half of the rectifier is supplied from the common secondary winding of the transformer T302 , is three-phase bridge connected and gives one half of the rectified voltage. Both section of the rectifier are series connected for the rectified current.

The ripple is smoothed by a type T/2 filter consisting of the choke L301 , of an inductance of 1.2 Hy at 1.2 amps. and a set of condensers C301 with a total capacitance of 16 uF for the working voltage of 1500 V.

After passing the filter , the rectified voltage is connecte

Declassified in Part - Sanitized Copy Approved for Release 2013/10/18 : CIA-RDP80T00246A071100330001-5

Declassified in Part - Sanitized Copy Approved for Release 2013/10/18 : CIA-RDP80T00246A071100330001-5
NO FOREIGN DISSEM

50X1-HUM

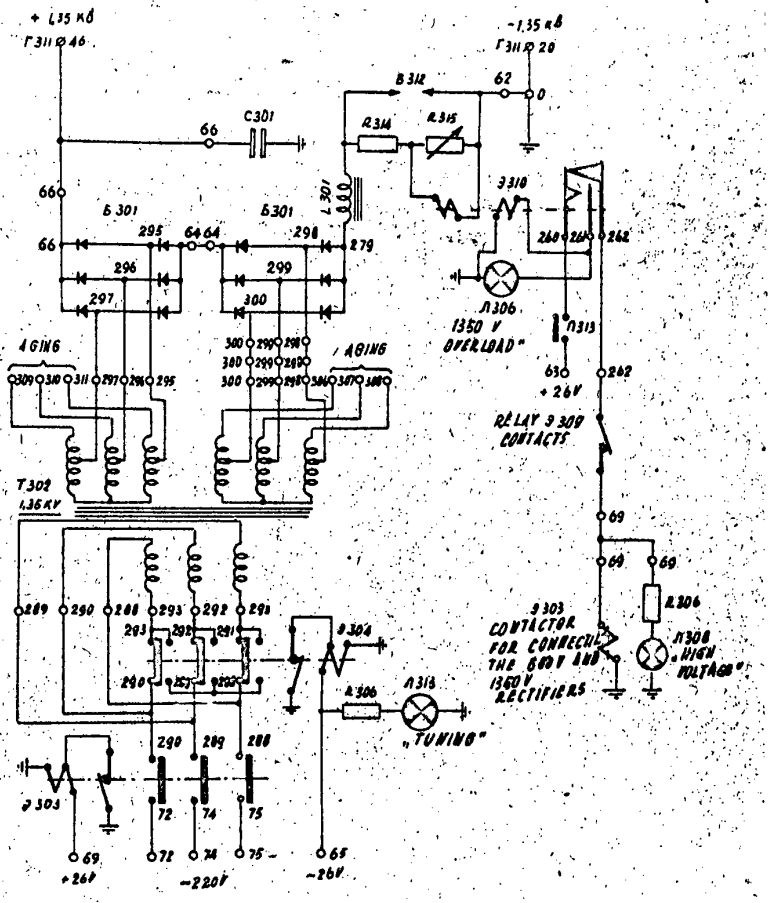

Fig. 6-7. The schematic diagram of the 1,350 V rectifier.

to the bleeder resistors R301 , R302-1 and R302 (see the schematic diagram of the type BCP-6 selenium rectifier).

The purpose of the bleeder resistor is to prevent xxxx an undue rise in voltage when the rectifier is unloaded.

Beside this , from the resistor R301 the voltage is tapped and brought out to the control terminal board 302. The voltage divider consisting of the resistors R301 (10.000 ohm), R302-1 and R302-2 (each 40.000 ohms) divides the 1.350 V in a ratio of 1:5. The voltmeter plugged into the jack inscribed "1,350 Kv" of the terminal board 302 will read a voltage of 270 V. Therefore , the readings of the voltmeter

SECRET
NO FOREIGN DISSEM
Declassified in Part - Sanitized Copy Approved for Release 2013/10/18 : CIA-RDP80T00246A071100330001-5

Declassified in Part - Sanitized Copy Approved for Release 2013/10/18 : CIA-RDP80T00246A071100330001-5
NO FOREIGN DISSEM

50X1-HUM

must be multiplied by five.

The +1,350 V voltage is led across the contact 66 of the block 2 to the terminal 48 of the BCP-6 rectifier rack terminal board 311 and from there by cable to the terminal 48 of the transmitter rack terminal board 901.

On figure 5-7 the automatic overload protection of the 1.350 V rectifier by means of the overload relay 310 is evident. The current value which will operate the relay as adjusted by the shunting resistor R315. A protection against over voltages arising on the overload relay coil during short circuits is provided in the form of a spark-gap connected in parallel to the shunting resistor and to the realay winding. In the instant of the short circuit a spark jumps across the spark-gap , thus protecting the relay coil against possible break-downs.

During the tuning of the transmitter or when operating at reduced power , the primary winding of the transformer T302 is remotely switched by means of the contactor-selector 304 from delta to star , which is evident from figure 5-7. This way the rectifier voltage is reduced to 750 V.

3. Design features and assembly of the BCP-6 rectifier.

The selenium rectifier BCP-6 (fig. 5-8) consists of five blocks : Blocks 1 , 2 , 3 , 4 and5.

The blocks are located in a special rectifier rack and , when necessary , may be removed from it.

Beside these , the rack contains an electric motor and a ventilator system for forced air cooling of the selenium rectifier and other small components.

The rectifier rack. The rectifier rack (fig. 5-9) has these dimensions: 1.700 X 505 X 662 mm. Its welded frame is ,

NO FOREIGN DISSEM
Declassified in Part - Sanitized Copy Approved for Release 2013/10/18 : CIA-RDP80T00246A071100330001-5

Declassified in Part - Sanitized Copy Approved for Release 2013/10/18 : CIA-RDP80T00246A071100330001-5

50X1-HUM

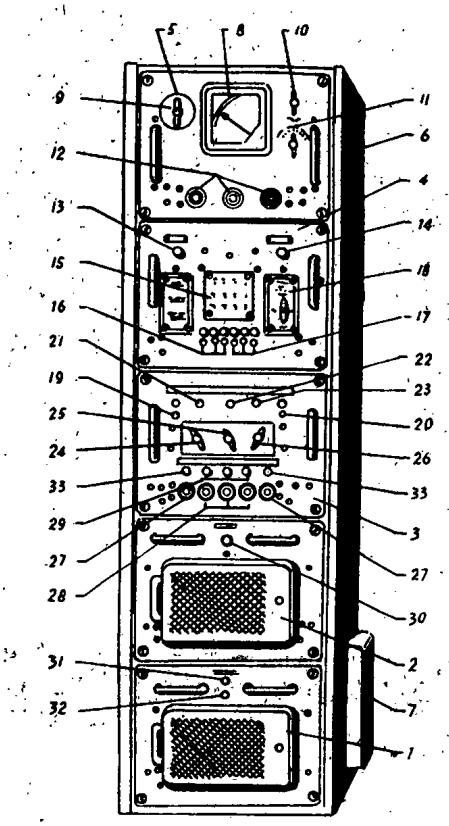

Fig. 5-8. General view of the type BCP-6 selenium rectifier.
1.-block 1;2- block 2;3-block 4;5-block 5;6-relay rack;
7-terminal board 311 cever;8-voltmater;9-selector switch
" "("power line off - powerplant")(302);
10- voltmeter selector wwitch (305); 11- voltage regulator
(310);12- 25 amp. fuses;13- signal lamp " "
("overheating");14- signal lamp " "("600 V o-
verload");15- terminal board for cheking the rectified vol-
tages (302);16- 3 amp. fuses in the 600 V rectifier circuit;
17- 3 ampp. fuses in the 26 V rectifier circuit;18- radio
communication unit supply switch (317);19- 1 amp. fuse in
the -300 V rectifier;20- 1 amp. fuse in the +300 V rectifier;
21- pilot lamp " "("filament");22-pilot lamp "
("high voltage");23- pilot lamp " "("power lamp");
24- manual switch " "("filaments") (314);25- manual
switch "-300 V and +300 V"(315); 26 - manual switch "600 V and
1,350 V"(316);27- 15 amp. fuses;28- 20amp. fuses;29- neon
pilot lampsof the 20 amp. fuses;30- pilot lamp "
("tuning");31-pilot lamp " "(1,350 V ")(1,350 V over-
load");32-emergency high voltage switch (313);33-neon pi-
lot lamps of the 15 amp. fuses.

made of engle irons. To the frame , by means of screw are faste-

tened aluminium walls.

In the right wall is cut out for a terminal board which is

fastened to the frame of the rack. The cut out and the

Declassified in Part - Sanitized Copy Approved for Release 2013/10/18 : CIA-RDP80T00246A071100330001-5

Declassified in Part - Sanitized Copy Approved for Release 2013/10/18 : CIA-RDP80T00246A071100330001-5
NO FOREIGN DISSEM

terminal board are covered with a removable cover.

In the rear wall are openings for exhausting the heated air which has passed over the BCP-6 rectifier blocks.

The rack has a number of guide rails made of "U" shaped steel. These rails guide the blocks during their insertion or removal from the rack.

At the very bottom section of the rack is the block 1, above it is the block 2, etc. At the very top of the rack is the block 5.

In the rear part of this rack are fastened to the frame contact panel with guide holes and receptacles. When the blocks are slid into the rectifier rack their knife contacts and guide pins enter these receptacles and guide holes.

The rectifier blocks , after being slid into the rack , are fastened to the frame by four screws in the corners of the panel of each block.

The type 75 electric motor and the ventilator air cooling system for the rectifier BCP-6 selenium columns are located in the rear part of the rack under the block 4.

The wiring connecting the blocks is located along both sides in the rear of the rack. Wiring harnesses are used. at the end of each conductor is a number which agrees with the number on the contact panels.

All the units and components of the rack of the entire BCP-6 rectifier are marked in the same way as appears on the schematic diagrams.

The rectifier is mounted on rubber pads and is fastened to the radio van floor. For better stability of the rack it is also fastened to the front and to the left wall of the radio van with rubber pads between the rack and the wall.

SECRET
NO FOREIGN DISSEM
Declassified in Part - Sanitized Copy Approved for Release 2013/10/18 : CIA-RDP80T00246A071100330001-5

Declassified in Part - Sanitized Copy Approved for Release 2013/10/18 : CIA-RDP80T00246A071100330001-5

50X1-HUM

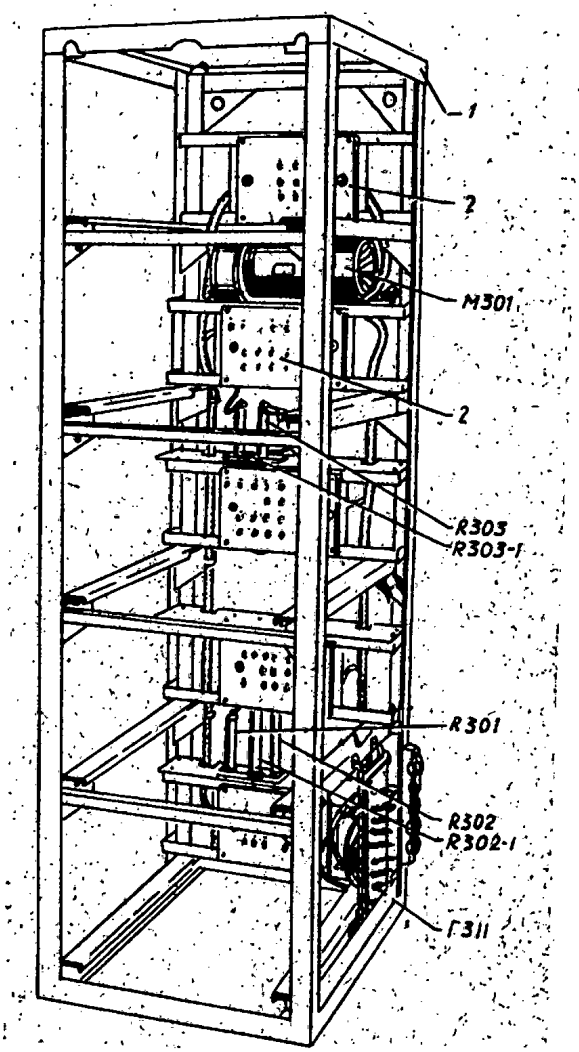

Fig. 5-9. The BCP-rectifier rack(side and rear cover removed: 1- frame; 2- contact panels (terminal board).

Block 1. The frames of all five rectifier BCP-6 blocks are designed alike. A panel is screwed to the front of a cast silumin frame. The control gear , lipot lamps etc. are fastened to this panel.

A panel with knife contacts used for connecting the blocks into the electrical unit of the BCP-6 rectifier is mounted at the rear of the frame.

The rear contact panel of each block has two guide pins

Declassified in Part - Sanitized Copy Approved for Release 2013/10/18 : CIA-RDP80T00246A071100330001-5

Declassified in Part - Sanitized Copy Approved for Release 2013/10/18 : CIA-RDP80T00246A071100330001-5
NO FOREIGN DISSEM

50X1-HUM

which enter the respective guide holes of the rack when the block is slid intoi it.

The wiring at the rear panel is made in suchs a way as to be able to bend the conductors after unscrewing of the panel and thus to ease the access to any contact.

The front panel carries the air oil filter with perforated aluminium insert screens and the pilot lamp 306 (with the inscription " "("1,35 KV overload")and theam emergency power switch (600 V and 1,35 KV) (313)

Inside the block is mounted the 1,35 KV filter consisting of the choke L301 and of the set of condensers C301. In the right front corner mounted on a separate panel is the overload relay 310 with the adjustment shunt R315and the mica sparkgap B312.

In the upper section of the block are two detachable selenium collumn rectifier 301 blocks. The selenium blocks are fastened by two screws to the contact panel of the block 1.

Block 2. On the front panel of the block 2 id an air oil filter mounted in the same way as in the case of the block 1. Above this air filter is the pilot lamp 313 (with the inscription " " ("tuning").

Inside the block is the 1.35 KV transformer T302 , the contactor 308 which connects the transformer and the selector contactor 304 for connecting the primary transformer T302 winding from delta to star.

Above these is the second half of the 1,35 kV rectifier consisting of the two detachable selenium column blocks 301.

Block 3. On the front of the block 3 are three 20 amp. fuses B301 with neon pilot lamps 302 , two 15 amp. fuses B308 with neon pilot lamps 302 , three manual emergency switches

SECRET

NO FOREIGN DISSEM

Declassified in Part - Sanitized Copy Approved for Release 2013/10/18 : CIA-RDP80T00246A071100330001-5

Declassified in Part - Sanitized Copy Approved for Release 2013/10/18 : CIA-RDP80T00246A071100330001-5
NO FOREIGN DISSEM

(314, 315, 316), two type 1 amp. fuses (B310 and B311) with neon pilot lamps 312 and three pilot lamps: 303 (with the inscription " "("filaments"), 308 (with the inscription" "("high voltage") and 311(with the inscription " "("power line").

Inside the block are two contactors : in the left front corner the contactor 301 for connecting the vacuum tube filaments , and in the right rear corner the contactor 302 for connecting the +300 V and the -300 Vrectifier transformer T304. Between the contactors mounted aon a separate panel is the relay 308 with the dropping resistor R310. In the center of the block on the left hand side is the filter choke L303 belonging to the +300 V rectifier and on the right hand side, is the filter choke L304 belonging to the -300 V rectifier. Along side the choke are two sets of electrolytic condensers (C304 and C303) of the +300 V and -300 V rectifiers.

On top are two removable selenium column blocks: on the left hand side for the +300 V rectifier and on the right hand side for the -300 V rectifier.

Block 4. At the bottom of the front panel of the block 4 are three 3 amp. fuses B302 with neon pilot lamps 304 for the protection of the 26 V rectifier transformer , and three 3 amp. Fuses B309 with neon pilot lamps 307 for the protection of the 600 V rectifier transformer. In the center of the panel is the control terminal board 302 for checking the rectified voltages. In the upper corner of the panel are two pilot lamps: 309 (with the inscription " " ("overheating" and 310(with the inscription " 600 "("600 overload") Also located on this panel is the radio communication unit supply switch (The 25 V rectifier switch) (S17).

Inside the block in the upper right corner mounted on a separate panel is the overload relay 309 of the 600 V rec-

NO FOREIGN DISSEM
Declassified in Part - Sanitized Copy Approved for Release 2013/10/18 : CIA-RDP80T00246A071100330001-5

Declassified in Part - Sanitized Copy Approved for Release 2013/10/18 : CIA-RDP80T00246A071100330001-5
NO FOREIGN DISSEM

front
tifier. In the left ~~at the~~ corner on a separate panel are two type 4C gashes voltage regulators (301) with the dropping R304-1 and R304) and shunting (R305) resisters. The center of the block between the panels contains , between the panels the 600 V rectifier choke L302. On the left hand side in the block is the 600 V rectifier transformer 303 and on the right hand side is the 26 V rectifier transformer T305. Between the transformers is the 600 V rectifier condenser set C302.

On the top of the block , mounted on brackets , is the 26 V ~~xia~~ selenium column rectifier 305 and together whit it , mounted on the front panel , is the biwetalic relay 312. The detachable 600 V rectifier 302 blocks are mounted in the above described manner.

Block 5. On the front panel of the block 5 are three 25 amp. fuses B304 and the voltmeter 301. Beside these on the front panel are also the handles of the selector switches on the left hand side the selector switch " " ("power - line - off - power plant") handle (302) , on the right hand side on top the voltmeter selector switch handle (305) , and below it the autotransformer regulator switch " "("voltage - higher - lower") handle (310

Inside the block on the front panel are located on the left hand side the " "("power line -off - power plant") selector switch (302) , on the right hand side on top the voltmeter selector switch (305) , and below it the autotransformer regulator switch " " (" voltage - higher - lower"). In the 310 selector switch (in its decks) are mounted the are supressing wire resistors R309-1 ,R309-2 , R309-3. In the front part of the blockon the left hand side is the "220 V - 300 V" power line selector switch(301).

Declassified in Part - Sanitized Copy Approved for Release 2013/10/18 : CIA-RDP80T00246A071100330001-5

Declassified in Part - Sanitized Copy Approved for Release 2013/10/18 : CIA-RDP80T00246A071100330001-5
NO FOREIGN DISSEM

The rear space of the block is occupied by the transformer T301. A part of this space in the block is empty.

The rectifier BTB-6 selenium column air cooling system. The air cooling system of the rectifier selenium columns consists of a centrifugal ventilator driven by a three-phase alternating current electric induction motor At -75.

The cold air is drawn in over the air oil filters in the blocks 1 and 2 of the rectifier. The air current flows fromthe bottom to the top past the selenium columns and transformers (and thereby cools them) exsust through the opening in rear wall of the rectifier rack , opposite the block 4 ,

The screen of the air oil filters are covered with a thin oil film , as the air passes over the filter , the dust settles on the screens. When these filters become dirty , they must be washed in a 25 % solution of automobile oil and gasoline (petrol). The period between the individual cleanings is determined by the cleanlines of the air in the radio van and by the time of the year: during the summer more frequently , during the winter less frequently.

5-3. The transmitter vacuum tube filament transformer, block and the T310 vacuum tube filament transformer. The transmitter vacuum tube filament transformer is used for heating the filaments of the high frequency section , the modulator and the transmitter monitor vacuum tubes. The block contains three transformers of two types.

The transformer of this block (see fig. 5-10) step down the 220 V alternating current voltage and supply the following voltages :

1. The transformer T307 -1 :

a) 13 V , 11 amps.- for heating the filament of one of

Declassified in Part - Sanitized Copy Approved for Release 2013/10/18 : CIA-RDP80T00246A071100330001-5

Declassified in Part - Sanitized Copy Approved for Release 2013/10/18 : CIA-RDP80T00246A071100330001-5
NO FOREIGN DISSEM

the ty pe Y-80 modulater vacuum tubes;

b) 13 V ,2.5 amps. - for heating the filament of one of the type -7 second power amplifier vacuum tubes;

2. The transformer T307-2 - the same as the transformer T307-1;

3. The transformer T306;

a) 13 V ,2.5 amps. - for heating the filaments of the output power ampifier type -7 vacuum tubes (each of these vacuum tubes is supplied from a separate secondary winding);

b) 6,5 V , 6,8 amps.- for heating the filament of the vacuum tubes of the first four high frequency section stage and of the transmitter operation indicator vacuum tube (all of these vacuum tube are supplied from a common secondary winding)

All three transformers are constant voltage (stabilized) transformers , The sedondary voltage is maintained constant with primary voltage variations from 180 V to 240 V. The three transformer differ only in their secondary windings and their primary windings and their stabilization are alike.

The stabilizing proces takes place in the following manner The alternating current is applied to the orimary transformer winding by two paths: over the stabilizing condensers C305 and C306 and over the choke L309. The inducyance of the iron core choke L302 change is dependent on the applied voltage. At low voltages the current across the condenser and across the choke is not large , so that with a voltage of 180 V or more it is sufficient to establish the nominal voltage on the secondary transformer winding. At increased primary voltages both currents (across the choke and across the condenser)

Declassified in Part - Sanitized Copy Approved for Release 2013/10/18 : CIA-RDP80T00246A071100330001-5

Declassified in Part - Sanitized Copy Approved for Release 2013/10/18 : CIA-RDP80T00246A071100330001-5
NO FOREIGN DISSEM

increase , so that the phase angle between the current also increases. The secondary winding stabilination is achieved by the common section of the change in the current and the phase angle between them.

The jacks 310-1 , 310-2 , 310-3 are used for checking the voltage of one of the secondary windings of each transformer; the voltages of the other windings are in a predetermined relation to the checked voltages.

In cnase of a breakdown of the condenser C305 or C306, or in c se of a short circuited choke L309 the transformer winding voltages will be lower and the stabilization will be impaired. In case of short circuited primary or secondary transformer winding , its voltage will also be smaller and the cuerrent drawn fopm the power line will be smaller than the normal current. Therefore a short circuit does not harm these transformers. In case of open circuited choke windings or of an open circuited lead which connects the choke to the transformer , the secondary winding voltages will rise above normal and the voltage across the condensers C305 and C306 may be in excess of 400 V. During the normal opertaion of the stabilized transformer , the voltage across the choke L309 and across the condensers C305 and C306 is of the order of 300 to 400 V.

The primary three- phase alternating current voltage 220 V comes to the filament transformator block from the terminal 55 , 56 , 67 , of the 901 transmitter rack terminal board , across the rtansmitter rack and the filament transformer block connecting boards 313 (see fig. 8-10). The transformer primary windings are delta connected. The terminal board 315 contains two interlocking contact: when the block is drawn out of the rack the control circuit of the contactor 301 is opened and the

Declassified in Part - Sanitized Copy Approved for Release 2013/10/18 : CIA-RDP80T00246A071100330001-5

Declassified in Part - Sanitized Copy Approved for Release 2013/10/18 : CIA-RDP80T00246A071100330001-5
NO FOREIGN DISSEM

50X1-HUM

transmitter is thereby disconnected.

The lower section of the transmitter rack contains , besides the filament transformer , a separate step-down (from 220 V) filament transformer T310 (see fig. 5-10) whose secondary windingis rated 6.3 V at 3.8 amps, and supplies the filaments of the preamplifier and automatic modulation level control vacuum tubes in the audio frequency section and also the filaments of the vacuum tube voltmeter and modulator vacuum tubes.

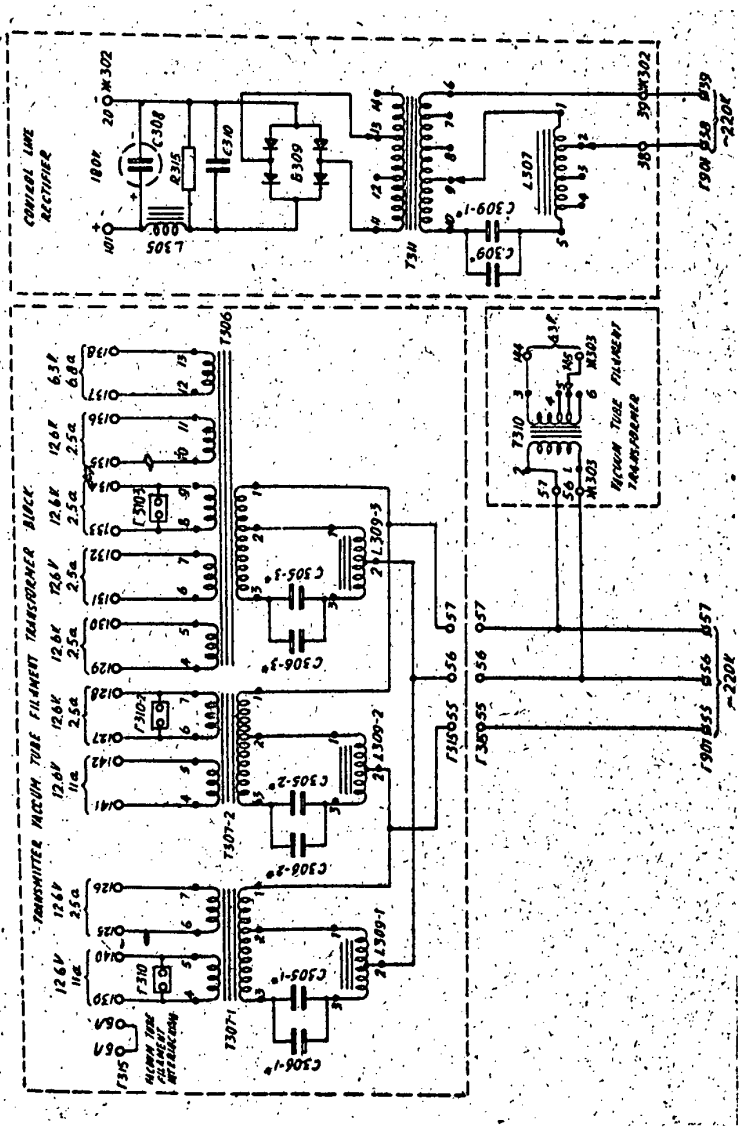

Fig. 5-10. Schematic diagram of the supply elements located in the transmitter rack

NO FOREIGN DISSEM
Declassified in Part - Sanitized Copy Approved for Release 2013/10/18 : CIA-RDP80T00246A071100330001-5

Declassified in Part - Sanitized Copy Approved for Release 2013/10/18 : CIA-RDP80T00246A071100330001-5
NO FOREIGN DISSEM

The transformer T310 is stabilized. Its primary winding is connected to 220 V coming from the contacts 56 and 57 of transmitter rack terminal board 901 across the contacts 56 and 57 of the connecting terminal board 303. The secondary winding is connected to the contacts 144 and 145 of the terminal board 303.

The transformer T310 and the connecting terminal board 303 are located in the lower section of the transmitter rack on the panel of the control line rectifier which supplies some of the relay control circuits.

5-4. The type BC -2 selenium rectifier.

1.The schematic diagram.

The type BC -2 selenium rectifier is used for supplying the receiving apparatus and the remote control unit with chreqt current.

The rectifier BC -2 (see fig. 5-11) consists of three fullwave bridge connected rectifiers which supply the following nominal voltages:

1) 270 V , 90 mm - for supplying the anodes and screen grids of the receiver vacuum tubes and for supplying the remote control unit amplifier vacuum tubes.

2) -105 V , 5.9 ma - for supplying the bias circuits of the receiver vacuum tube control bridge.

3) 27 V , 1,2 amps. - for heating the vacuum tube filaments and for operating the stepping relays of the receiver automatic communication channel tuning.

4) 5,5 V , to 8 ma - for supplying the microphone circuit of the remote control unit.

Besides these voltage, the SC -2 rectifier also supplies 6,3 V alternating current (2,5 amps.) for heating the amplifier

Declassified in Part - Sanitized Copy Approved for Release 2013/10/18 : CIA-RDP80T00246A071100330001-5

Declassified in Part - Sanitized Copy Approved for Release 2013/10/18 : CIA-RDP80T00246A071100330001-5
NO FOREIGN DISSEM

50X1-HUM

vacuum tube filaments (in the radio van and in the remote control unit) as wellas for the pilot lampsand the illuminating lamps on the front panel of the remote control unit.

The BC -2 rectifier is supplxied by alternating current at 110 V or 220 V. A toggle switch 701 for switching the supply voltage from 110 V and véce verse is built into the rectifiers. This toggle switch deconnents the the transformer T701 and the choke L703 windings with which éperate as autotransformers in relation to the condensers C701.

The rectifier transformer is stabilized in the same manner as are the transformer in the transmitter vacuum tube filament transformator block. The transformator supplies a constant voltage with a power line voltage variation from 85 V to 120 V when supplied from a 110 V power line or from 270 V to 240 V when supplied from a 220 V power line.

The primary voltage proceeds to the transformer T701 across the stabilizing condensers C701. In case of a 110 V supply , the choke is connected as an autotransformer with a large transformation ratio and only one half of the transformer primary winding is connected. In both cases , that is with a supply voltge of 110 V or 220 V , the secondary voltage remains the same.

The transformer has three secondary windings. The fundamental voltage of the first (usually) secondary winding , from the contacts 11 and 12 is applied to the single phase bridge connected rectifier 701. The rectified voltage is filtered by a " " filter consisting of the choke L702 and two condensers C702 and C708. The choke L702 is connected in negative voltage lead. The rectified voltage is 275 V when delivering 90 ma. when unloaded , the voltage rises to approximately 320 V.

SECRET
NO FOREIGN DISSEM
Declassified in Part - Sanitized Copy Approved for Release 2013/10/18 : CIA-RDP80T00246A071100330001-5

Declassified in Part - Sanitized Copy Approved for Release 2013/10/18 : CIA-RDP80T00246A071100330001-5
NO FOREIGN DISSEM

50X1-HUM

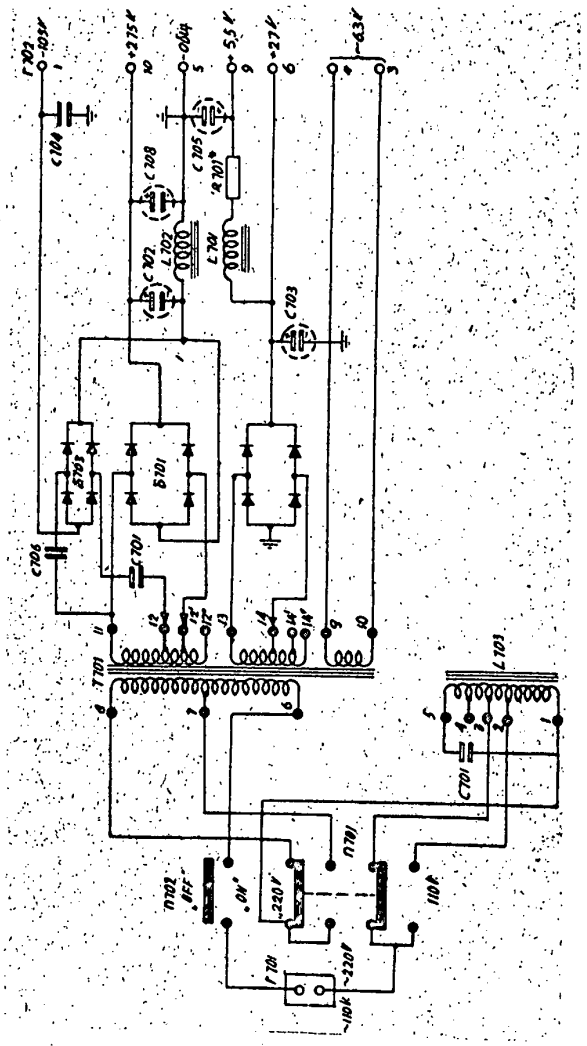

Fig. 5-11. Schematic diagram of the BCR-2 selenium rectifier for supplying the receivers and the remote units.

The alternating current for obtaining the -105 V bias is also obtained from the first secondary transformer winding

Declassified in Part - Sanitized Copy Approved for Release 2013/10/18 : CIA-RDP80T00246A071100330001-5

Declassified in Part - Sanitized Copy Approved for Release 2013/10/18 : CIA-RDP80T00246A071100330001-5
NO FOREIGN DISSEM

from the contacts 11 and 12 , from where it is applied across the coupling condensers C706 and C707 to the rectifier 703. The value of the couplingcondensers is so chosen in such a way as to obtain 105 V after rectification. The bias voltage is filtered by the choke L702 and by the condenser C704.

The 27 V direct current is obtained from the rectifier 702. The alternating current voltage is connected to it from the second secondary transformer winding from the contacts 13 and 14. The rectified voltage is filtered by the condenser C703.

The third secondary transformer winding , contact 9 and 10 , supplies 6,3 V alternating current.

The microphone circuit in the remote control unit is supplied from the 27 V rectifier 702. The choke L701 and the resistor R701 are connected in the positive lead and reduce the rectified voltage to 5 to 6 V when current is drawn in the microphone circuit. The condenser C705 together with the choke L701 and the resistror R701 filter the voltage ripples and make the voltage suitable for supplying the microphone circuit.

To kixx raise the voltage after the rectifier selenium columns have aged , the secondary transformer windings are provided with taps: the first winding with the 12" tap,the second winding with the 14" tap.

The rectifier is not equipped with fuses because short circuit in the secondary windings do not endanger it. When a short circuit occurs in any part of the circuit , the rectifier will cease to operate normally , that is , it will deliver a reduced voltage. Almost in all cases of trouble in the transformer and choke windings and in case of the break down of the condenser C701 , the rectifier delivers a reduced voltage in all circuits.

Declassified in Part - Sanitized Copy Approved for Release 2013/10/18 : CIA-RDP80T00246A071100330001-5

Declassified in Part - Sanitized Copy Approved for Release 2013/10/18 : CIA-RDP80T00246A071100330001-5

50X1-HUM

2. Designe features.

The BC -2 rectifier (see fig. 5-12) is designed in the shape of a steel cabinet with a detachable upper cover which is fastened to the cabinet by screws.

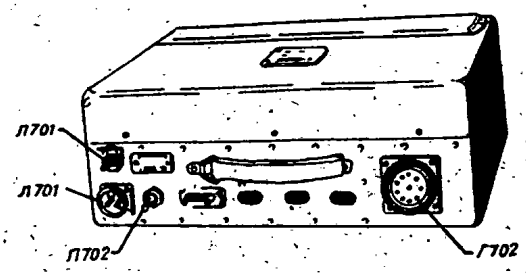

Fig. 5-12. The type BCR-2 selenium rectifier for supplying the receivers and the remote control units (general view.)

The inside of the cabinet is devided into two sections (see fig. 5-13): one section contains the transformer , the choke , the condensers and the resistor ; the other section contains the rectifiers. The rectifier columns are separate fromm the transformer at tp prevent their excessive heating. The selenium rectifiers are cooled by natural ventilation (convection) Therefore , at the bottom of the cabinet , under the selenium columns , are cut outs covered with a screening and a special coover These coovers must be removed when the rectifier is operating.

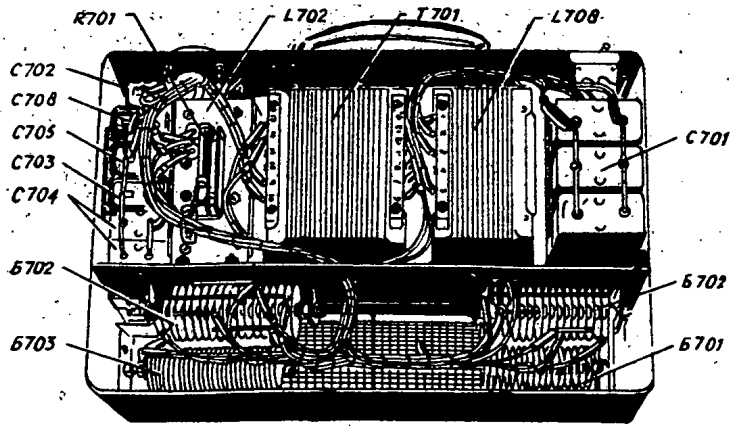

Fig. 5-13. The type BC -2 selenium rectifier (rear top view with the cover removed).

The most convenient rectifier position is the horizental position since then maximum air circulation takes place between the sele-

Declassified in Part - Sanitized Copy Approved for Release 2013/10/18 : CIA-RDP80T00246A071100330001-5

Declassified in Part - Sanitized Copy Approved for Release 2013/10/18 : CIA-RDP80T00246A071100330001-5
NO FOREIGN DISSEM

nium cooling fins.

The rectifier power switch (702) and the supply voltage selector switch (701) handles have been brought out to the side wall and above them are the respective inscriptions. The selector switch 701 is equipped with a locking device to fix the selector switch in the desired 110 or 220 V position. On the same wall are also the input and output connectors (701 and 702)

5-5. The type PY-45A converter and filter.

The type PY-45A converter is used for supplying the receiver apparatus when this is battery powered.

The type PY-45A converter with its filter (see fig. 5-14) supllies the following direct current:

1) 275 V - for supplying the anodes and screen grids of the receiver vacuum tube and the dynamic loudspeaker amplifier vacuum tubes.

2) -105 V - for supplying the receiver vacuum tube control grids.

The converter is supplied from the 28 V circuit of the six series connected type 4-[illegible]-45A storage batteries. The current flows from the batteries over the distribution cabinet and over the common panel of the receivers (or aover the auxilliary receiver control unit) to the converter (see the schematic diagram of the cable connections in the radio van).

The converter deliver on its high voltage side a voltage of approximately 450 V.

To reduce the high voltage , two groups of resistors R705 and R706 are connected in the leads of the converter low voltage side. The resistors together with the condensers C713,

SECRET
NO FOREIGN DISSEM
Declassified in Part - Sanitized Copy Approved for Release 2013/10/18 : CIA-RDP80T00246A071100330001-5

Declassified in Part - Sanitized Copy Approved for Release 2013/10/18 : CIA-RDP80T00246A071100330001-5
NO FOREIGN DISSEM

50X1-HUM

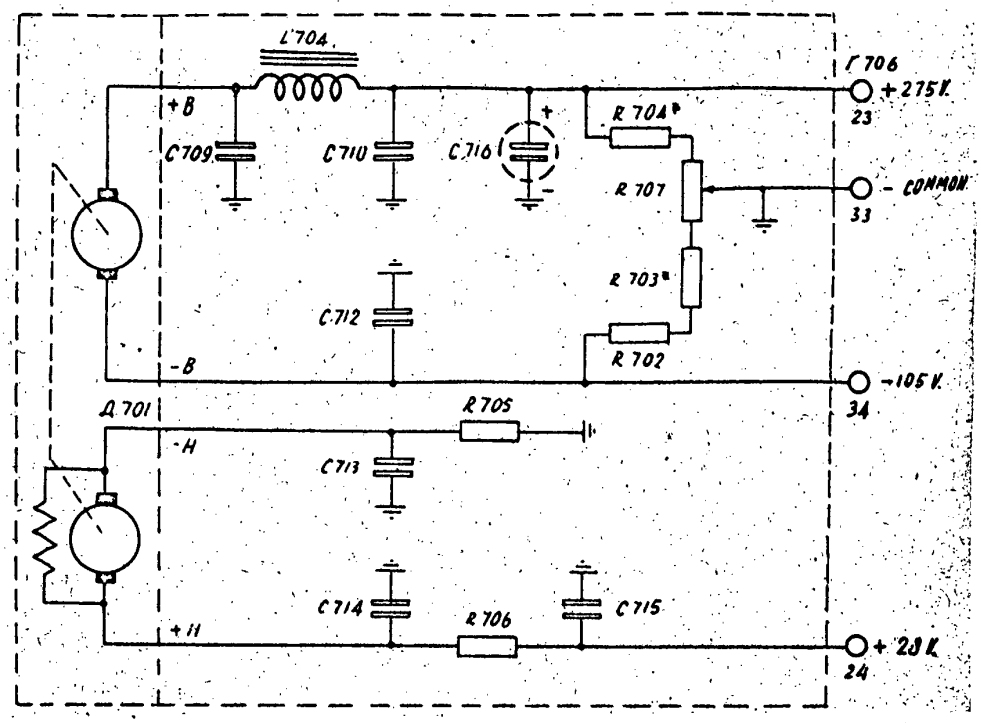

Fig.5-14. Schematic diagram of the type PY-451 converter with its filter.

C714 and C715 form a filter to reduce the electric disturbances which are caused by the arcing of the brushes. Each group of condensers consists of two resistors connected in parallel (or in series) with a resistance of 0.25 ohm (or 1 ohm) or of 0,5 Ohm resistor. With the proper choice of these resistors the converter supplied from the 26 V to 28 V line will deliver 280 V. This voltage is then filtered by the choke L704 and the condensers C709 , C710 ,C716 and C712.

The resistors R704 ,R707 , R703 and R702 form a voltage divider which divides the 300 V into 270 V and 105 V.

5-6. The control line rectifier.

The control line rectifier is used for supplying some of the relays (in the central control unit and in the remote

NO FOREIGN DISSEM
Declassified in Part - Sanitized Copy Approved for Release 2013/10/18 : CIA-RDP80T00246A071100330001-5

Declassified in Part - Sanitized Copy Approved for Release 2013/10/18 : CIA-RDP80T00246A071100330001-5
NO FOREIGN DISSEM

50X1-HUM

control unit) and the radio communication unit control circuits.

The control line rectifier (see fig. 5-10) is a full wave bridge connected unit for supplying 180 V at 60 ma.

The rectifier is stabilized in the same manner as are the BC -2 rectifier and the transmitter vacuum tube filament transformer block.

The primary alternating current voltage is led over the stabilising choke L307 and the stabilizing condensers C309 and C309-1 to the transformer T311. The secondary transformer voltage is applied to the rectifier 309. The choke L303 and the condensers C310 and C308 filter the rectified voltage. The bleeder resistor R315 reduce the rectified voltage when the rectifier operates without a load.

The control line rectifier is supplied from 220 V coming from the contacts 38 and 39 of the transmitter rack terminal board 901 over the contacts 38 and 39 of the connecting terminal board 302 (see fig. 5-10) and the rectified voltage is brought out to the contacts 101 and 20 of the terminal board 302.

The rectifier is mounted on a panel and is located in the bottom section of the transmitter rack.

5-7. The storage batteries.

The battery sets consist of twelve type 4-HKH-45 alkaline storage batteries used in the radio van and of one type 3CT-80 acid storage battery located in the trailler and used for starting the gasoline (petrol) internal combustion engine of the power plant.

The alkaline batteries are used as a power source for the receiver apparatus , the remote control unit of the radio communication unit , and also for illuminating the radio van and for

SECRET
NO FOREIGN DISSEM
Declassified in Part - Sanitized Copy Approved for Release 2013/10/18 : CIA-RDP80T00246A071100330001-5

Declassified in Part - Sanitized Copy Approved for Release 2013/10/18 : CIA-RDP80T00246A071100330001-5
NO FOREIGN DISSEM

heating the sodeering iron in the abcence of alternating current There are two batteries sets each consisting of six storage 4-NKH-45 alkaline batteries connected in series and delivering 26 V to 30 V. These sets operate alternately ; while one is being charged, the other one is connected in the radio communication unit circuits and is being discharged. Aside of this , one of the sets may be carried out of the radio va to power the remote control unit. For powering the remote control unit , one half of the set suffices, i.e. three storage batteries 4-NKH-45 M, the other half may remain in the radio van (but is disconnected from the radio communication unit), or may be taken along to the remote control unit as a spare.

Technical data of the type 4-NKH-45M storage batteey:

1) number of series connected cells----------4
2) battery capacity when discharging at 5 amps. 45 amps.-
3) voltage of one cell after charging ----------1,75 V
4) normal voltage of one cell ----------1,3 V to 1,2 V
5) minimum voltage of one cell , to which it may be discharged ----------1 V
6) acount of electrolyte necessary for one cell when filling it for the first time ----------0,5 liter

Both sets of batteries are connavted to the distribution cabinet by means of the three - conducter cables (see the schematic diagrom of the cables connections in the radiom van).
Two conducters (of the cables) connect the 26 V and the third cable connect the 6,3 V to the distribution cabinet ; these voltage are obtained from six series connected cells. For this reason each of the 4-NKH-45M batteréés has a tap in the center of the battery , i.e. between sets of two cells. The ends of the batteri cables are connected to the terminals 66 ,67, 68 , 69 , 70 , 71 of the distribution cabinet.

SECRET
NO FOREIGN DISSEM
Declassified in Part - Sanitized Copy Approved for Release 2013/10/18 : CIA-RDP80T00246A071100330001-5

Declassified in Part - Sanitized Copy Approved for Release 2013/10/18 : CIA-RDP80T00246A071100330001-5
NO FOREIGN DISSEM

The battery charging current is 11 amps. when charing it for 7 ½ hours. The voltage of the whole battery set at the end of charging is 43 V.

When no alternating current is available , the batteries may be discharged to 30 V to 24 V (the batteries should not be discharged below 24 V). When alternating current power is available either from the power line or from the power plant, the battery set is then connected by means of a buffer to the 26 V rectifier and the voltage on the battery is maintained at 28 V to 30 V. The battery set is automatically connected to the 26 V rectifier by means of the relay 311.

The 6 V type 3CT-80 battery operates in the trailer power plat and , as was mantioned previously , is used for starting the gasoline engine of the power plant. The battery is being discharged only during the starting of the engine, and is being charged at all ~~tik~~ time while the engine is running. In case of need , a 6 V portable lamp fer alluminating purposes may be connected to the battery circuit (see the schematic diagram of the trailer in the appendix). The same battery supplies the automobile horn circuit located in the trailer.The connection of the battery is given in detail in the separate "power plant description and operating instructions" menual.

6-6. The distribution cabinet.

1. The schematic diagram.

The distribution cabinet is a unit from where the various supply voltages are distributed to the power consumption units.

Three-phase 220 V alternating current is brought to the terminals 38 , 39 and 40 (see fig. 5-15). From the terminals 38 , 39 , and 40 the three-phase alternating current continues to the charger - rectifier. From the terminals 75 , 76 and 77

Declassified in Part - Sanitized Copy Approved for Release 2013/10/18 : CIA-RDP80T00246A071100330001-5

Declassified in Part - Sanitized Copy Approved for Release 2013/10/18 : CIA-RDP80T00246A071100330001-5
NO FOREIGN DISSEM

The alternating current is led to the electric heater , to the elotric motor of the ventilator in the radio van body and to the receptacle ; from the terminals 84 and 40 the alternating current is led to the common panel of both receivers (and from there to the rectifier BC -2 for supplying the auxilliary receiver).

Inside the cabinet the alternating current branches of from the contacts 39 and 40 (ovat the fuses 303) to the illumination step down transformer T309 and from its secondary winding the 26 V current is led to the selenium rectifier B315 which supplies the relay 311 coil and to two receptacles 304 and to the terminals 79 across the closed contacts 6-5 and 9-8 of the energized relay 311) and to the terminal 78 (directly). From the terminal 78 and 79 the 26 V current is led to the lighting circuits.

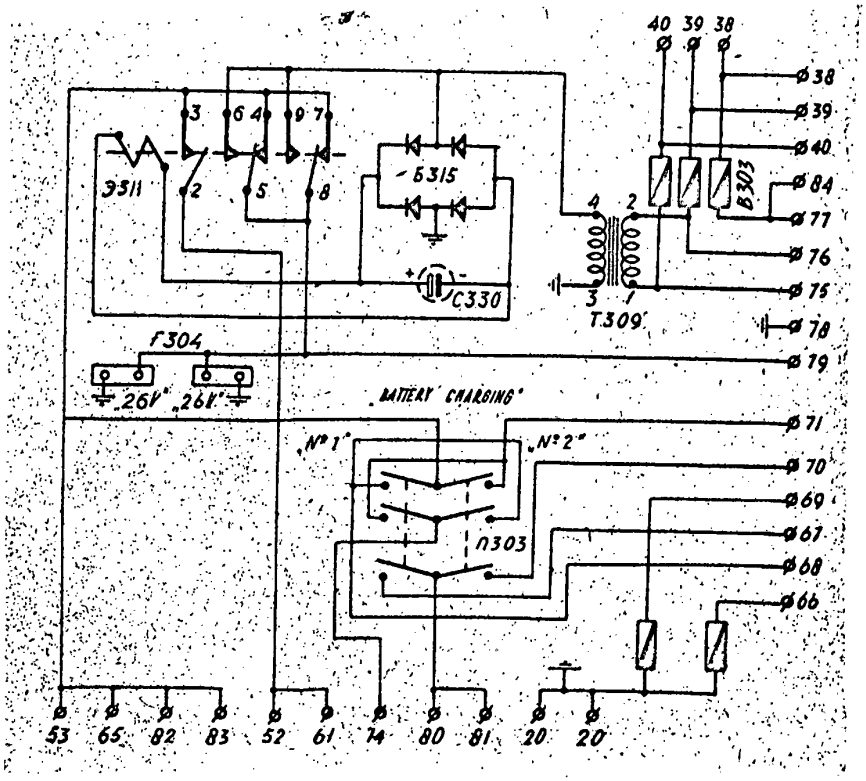

Fig. 5-15. The schematic diagram of the distribution cabinet.

Declassified in Part - Sanitized Copy Approved for Release 2013/10/18 : CIA-RDP80T00246A071100330001-5

Declassified in Part - Sanitized Copy Approved for Release 2013/10/18 : CIA-RDP80T00246A071100330001-5
NO FOREIGN DISSEM

The 26 V and 6V direct current from the two battery set branches out from the terminals 65 , 67 , 68 , 69 , 70 and71. The battery negative circuit is connected across thamp$ fuse E303 to the chassis terminal 20 and the positive 26 V battery circuits are connected to the selector switch 303 by which the batteries are switched for charging. The same switch switches the 6,3 V direct current voltage. The 26 V voltage of the battery which being discharged is led across the 303 switch to the terminals 53 , 65 , 82, 83 as well as across the normally closed contacts 4-5 and 7-8 of the relay 311 to the terminal 79 and to two receptacles 304. The 6,3 V voltage is connected to the terminals 80 and 81.

The rectifier ECP-66 26 V voltage is applied to the terminals 61 of the distribution cabinet and from the terminal 52 continues to the terminal 52 of the transmitter rack terminal board 901.

When alternating current is available , the contacts 3-2 of the energized relay 311 connect the discharging battery to the 26 V rectifier located in the block 4 of the rectifier ECP-66 and as a result of this , the battery operates as a buffer battery in conjunction with this rectifier.

The connecting up of the buffer battery to the 26V rectifier is particularly important during the operations of the electric motor of the automatic communication channel tuning , since when this motor reverses , (changes its direction of rotation) it consumes a large current and strongly "drains" (lowers the voltage) the rectifier circuit if the buffer battery is not connected.

The condenser C330 is used for raising the voltage value and for filtering the rectified voltage applied to teh relay 311 coil.

From the terminal 82 the voltage of the discharging battery

NO FOREIGN DISSEM
Declassified in Part - Sanitized Copy Approved for Release 2013/10/18 : CIA-RDP80T00246A071100330001-5

Declassified in Part - Sanitized Copy Approved for Release 2013/10/18 : CIA-RDP80T00246A071100330001-5
NO FOREIGN DISSEM

is led to the voltmeter of the charger - rectifier and the current of the same battery charger is led to the terminal 74.

From ther terminal 83 the 26 V voltage is led to the common panel of both receivers , from ther terminal 65 to the auxilliary receiver control unit and from the terminal 63 to the terminal 53 of the transmitter rack terminal board 901 and from there to the central control unit to the power plant starting and stopping push button.

The 6,3 V voltage is led from the terminal 60 to the common panel of both receivers , and from the terminal 81 to the special apparatus supply panel.

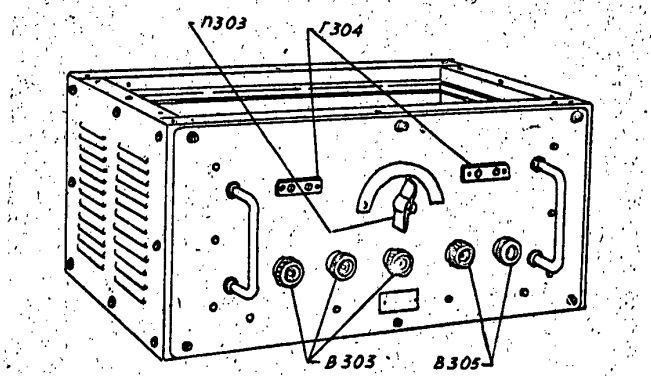

Fig. 5-16. Distribution cabinet (general view).

The distribution cabinet (fig. 5-16) is designed similerly to the realy rack blocks and consists of a chassis and a housing

The steel chassis may be removed from the housing after unscrewwing four holding screws. On the front panel is the battery charging selector switch (303) with the inscription " "(" 1 - battery charging - 2"). In the center position both batteries are disconnected. On the same front panel are three 6 amp. fuses B303 , two 15 amp. fuses B305 and two receptacles 304 for connecting the soldering iron and the portable lamps. Fastened to the rear wall are the

SECRET
NO FOREIGN DISSEM
Declassified in Part - Sanitized Copy Approved for Release 2013/10/18 : CIA-RDP80T00246A071100330001-5

Declassified in Part - Sanitized Copy Approved for Release 2013/10/18 : CIA-RDP80T00246A071100330001-5
NO FOREIGN DISSEM

50X1-HUM

terminal board with the knife contacts.

The relay and the battery charging selector switch are mounted on the base of the chassis. The housing consists of a steel frame covered with aluminium panels. The top of the frame is not covered and the charging rectifier is set on it and fastened to it.

5-9. The battery charging type BC 3-1 selenium rectifier

1. The schematic diagram.

The type BC3-1 selenium rectifier is used for charging the radio communication unit batteries.

The radio communication unit batteries consists of 24 series connected type 4-NKN-45M batteries , which , after charging , have a voltage of 43 V Their charging current is 11 amps. These parameters determine the design of the rectifier:

1) the rectified voltage - 30 to 44 V ,

2) the maximum rectified current - 11 amps.

The rectifier BC3-1 (fig. 5-17) consists of a three - phase regulating transformer (T308) , a tap changing switch for the voltage regulation (311) , a three selenium column rectifier (306) a voltmeter (302) and a ammeter (303) for checking the rectified voltage and the charging current.

The three-phase 220 V alternating current is connected to the terminals 38 , 39 , and 40 of the rectifier input terminal board and leads from there over the 6 amp. fuse S306 and the supply switch 308 to the primary transformer T308 winding connected in delta. The transformer has in each phase two secondary windings: one permanent winding and one regulating winding. The secondary windings give 11,5 V each and are connected in series. The taps of the regulator windings are connected to the selector switch 311 which connects them in a star. The ends of the permanent

SECRET
NO FOREIGN DISSEM
Declassified in Part - Sanitized Copy Approved for Release 2013/10/18 : CIA-RDP80T00246A071100330001-5

Declassified in Part - Sanitized Copy Approved for Release 2013/10/18 : CIA-RDP80T00246A071100330001-5
NO FOREIGN DISSEM

windings are connected to the three-phase rectifier. When operating the selector switch 311 is greater or smaller number of secondary winding turns is connected , which causes the change in the rectified voltage.

For the tap switching to take place without turning off the transformer , or arching , there are supressor resistors R317-1, R317-2 and R317-3 connected between the moveble selector switch contacts. The rectified voltage controlled by the direct current voltmeter 302 is brought out to the terminal board on the rear side of the rectifier : the positive lead to terminal 74 and the negative lead to terminal 20. This same voltage is also brought out on the rectifier front panel and may be used forcharging batteries which do not belong to the radio communication unit.

The discharging battery voltage is connected to the terminals 82 and 20. This voltage may be checked with a voltmeter 302 by pressing the momentary contact push-button 312 which connects the voltmeter to the discharging battery.

The selenium columns are cooled in the rectifier by a type Y-40 direct current electric motor (M314) driven ventilator. The motor when shunt connected , is designed for 28 V operation. Since the rectified voltage may reach 50 V , the motor is series connected , which enables it to operate safely at this voltage. The motor is turned on (when the ambient temperature is over +25°C.) by means of a toggle switch 318 located on the front panel of the rectifier.

2. Design features.

The rectifier BC3-1 (fig. 5-16) is built into a cabinet. The frame is made of welded steel angles and the side are covered with panels. The top of the frame is covered with a lid.

SECRET
NO FOREIGN DISSEM
Declassified in Part - Sanitized Copy Approved for Release 2013/10/18 : CIA-RDP80T00246A071100330001-5

Declassified in Part - Sanitized Copy Approved for Release 2013/10/18 : CIA-RDP80T00246A071100330001-5
NO FOREIGN DISSEM

50X1-HUM

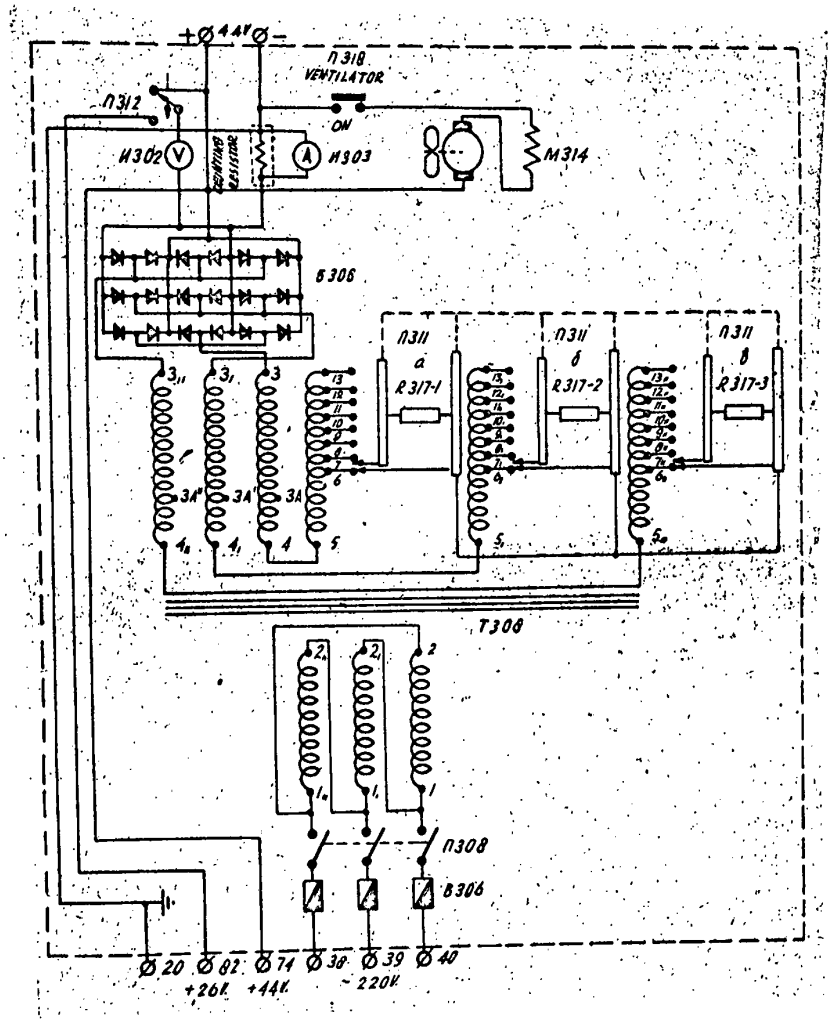

Fig. 5-17. Schematic diagram of the BCR-1 selenium rectifier for battery charging.

Between the lid and the frame , along the circumference, are gaps for exhousing the heated air from the rectifier. The air intake during natural (convection) or forced cooling comes throught the uncovered bottom of the cabinet.

On the front rectifier panel are mounted (see fig.5-18) three 6 amp. fuses B306 , the voltmeter 302 , the ammeter 303 , the momentary push-button 312 , the supply power switch 308

Declassified in Part - Sanitized Copy Approved for Release 2013/10/18 : CIA-RDP80T00246A071100330001-5

Declassified in Part - Sanitized Copy Approved for Release 2013/10/18 : CIA-RDP80T00246A071100330001-5
NO FOREIGN DISSEM

50X1-HUM

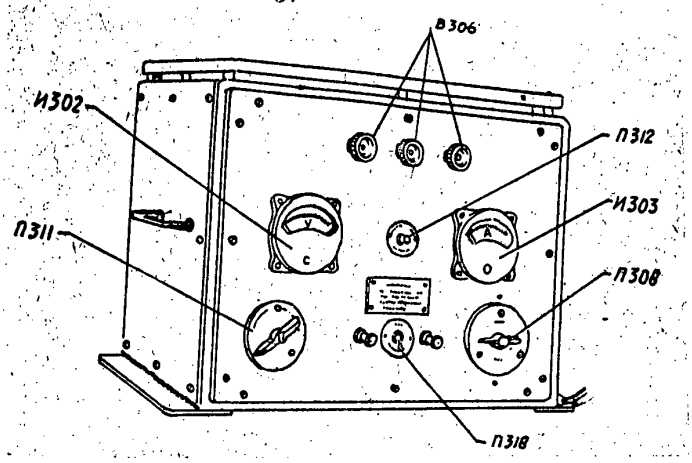

Fig. 5-18. The type BC3-1 charger rectifier (general view).

And the ventilator toggle switch (318). Beside this , the handle of the transformer tap changer switch (311) is also brought out to the front of the panel.

5-10. The type B -10-12 vibrator converter (in the remote control unit.

1. General.

The vibrator converter B -10-12 is a vibrator type voltage converter which converts low voltage direct current to a direct current of a higher voltage.

The vibrator converter B -10-12 is mounted in the remote control unit and supplies a nominal voltage of 220 V at 50 ma to the anodes of the amplifier vacuum tubes in the remotecontrol unit as wellas to the anodes of the audio oscillator 3 -10- vacuum tubes.

Three series connected type 4-НКН-45 М storage batteries carried to the remote control unit from the radio van supply the primaty (lower)voltage of the vibrator converter -12 V at 1,4 amps. The permitted supply voltage variation is 10,5 V to 13,5 V.

Thus the nominal power input of the vibrator converter is 16,8 watt and the nominal power output of the vibrator converter is 11 w. The effisiency of the vibrator converter in not lower than 60 %.

SECRET
NO FOREIGN DISSEM
Declassified in Part - Sanitized Copy Approved for Release 2013/10/18 : CIA-RDP80T00246A071100330001-5

Declassified in Part - Sanitized Copy Approved for Release 2013/10/18 : CIA-RDP80T00246A071100330001-5
NO FOREIGN DISSEM

50X1-HUM

2. The schematic diagram.

The operating principle of the vibrator converter. The vibrator converter B 10-12 (see fig. 5-19) belongs to the group of the simplest and most reliable vibrator converters using the method of synchronous rectification.

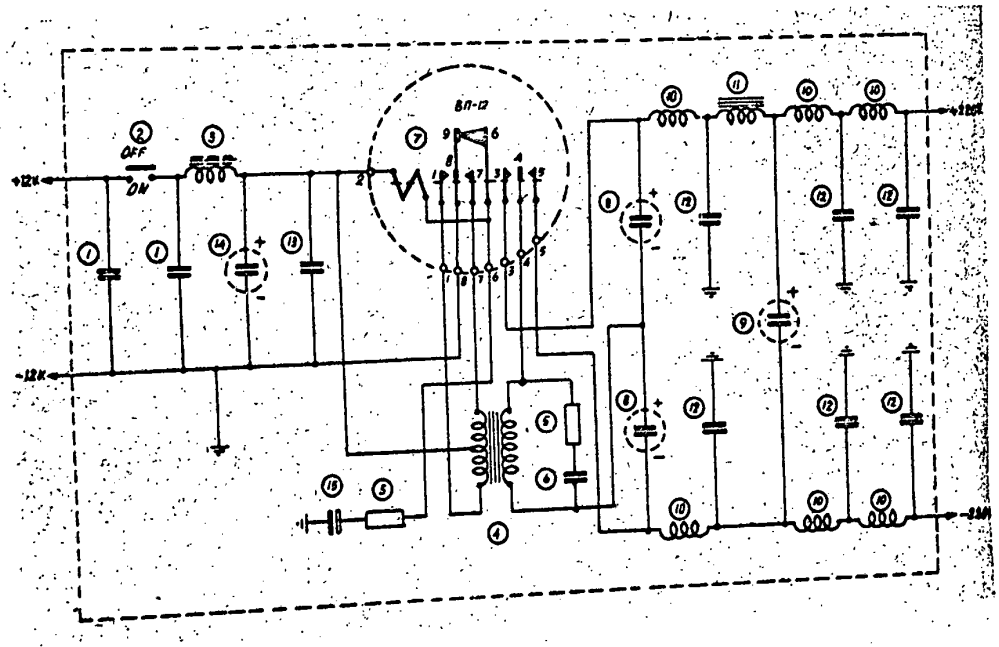

Fig. 5-19. Schematic diagram of the type B -10-12 vibrator converter.

SECRET
NO FOREIGN DISSEM
Declassified in Part - Sanitized Copy Approved for Release 2013/10/18 : CIA-RDP80T00246A071100330001-5

Declassified in Part - Sanitized Copy Approved for Release 2013/10/18 : CIA-RDP80T00246A071100330001-5
NO FOREIGN DISSEM

The vibrator converter operates in the following manner : The direct current which supplies the apparatus is changed by means of the periodically opening and closing of the vibrator 2 two pairs of contacts 1-8 and 7-6 connected in the primary transformer 4 winding cicuit into pulsating current with which generates an electromotive force (EMF) in the secondary transformer circuit.

The magnitude of the EMF generated in this phase is determined by the transformation ratio of the transformer.

One of the transformer secondary leads is connected to the movable vibrator contact 4 and the other lead is connected to the mid-point of the condenser-energy-accumulator 8.

In this may the vibrator contacts 1-8-7 , which are connected in the lower voltage circuit (12 V) form a rapidly switching transfer switch which alternately connects the primary transformer winding sections to the power supply.

The contacts 3-4-5 work in synchronism with the contacts 1-8-7 and connect the secondary transformer winding to the condensers (accumulator) 8.

In this way the vibrator contacts 3-4-5 which are connected in the higher voltage circuit form a mechanical rectifier.

The voltage on each of the condensers 8 is equal to the secondary transformer voltage. The higher voltage (220 V) is supplied by the two series connected condensers 8. The rectifier part of the vibrator converter is , naturally , connected as a voltage doubler.

To protect the transformer windings against overvoltages and to prevent are formation on the vibrator contacts , the vibrator converter contains are suppressor circuits consisting of a condenser and a resistor. The are suppressor circuit of the main vibrator contacts (contacts 1-8-7 and 3-4-5) consists

Declassified in Part - Sanitized Copy Approved for Release 2013/10/18 : CIA-RDP80T00246A071100330001-5

Declassified in Part - Sanitized Copy Approved for Release 2013/10/18 : CIA-RDP80T00246A071100330001-5
NO FOREIGN DISSEM

of the condenser 6 and of the resistor 5 and of the starting contacts (contacts 6-9) consists of the condenser 15 and the resistor 5.

The vibrator operating principle. The vibrator B -10-12 usesm the type V-12 (12 V)vibrator.

As is evident from figure 5-19 , the 12 V low voltage is led to the exciter winding over the toggle switch 2 , which is in the " " (" on") position and over the starter contacts 9-6

Under steady state conditions , the starter contacts 6-9 are closed and the contacts 1-8-7 and 3-4-5 are opened. In the instant of connecting the low voltage (in the vibrator located in the remote control unit the toggle switch 2 is permanently in the " " (" On ") position and the turning on and off of the 12 V low voltage connected to the vibrator converter is accomplished by setting the " "("supply") selector switch on the front panel of the remote control unit to the " ".("direct current") position and the " " ("off") position). the current flowing through the exciter winding generates a magnetic field which draws the armature to the core and disconnect the contacts 6-9 and connects the contacts 1-8 and 3-4.

The magnetic force is countered by the directive force of the armature which carries the contacts 4 , 8 and 9.

When the armature shift to the core side , the contacts 1-8 close and after a short time delay the contacts 3-4 close too. Thus the 12 V low voltage will become connected to one section of the primaty transformer winding and a current will flow through it. In the secondary transformer winding an EMF will be generated which , after the contacts 3-4 have closed , will be connected to the "upper" (according to the scHematic diagram fig. 5-19) condenser-accumulator 8 and it will charge up.

During the time when the contacts 8-7 and 4-5 are closed , the cántact 6-9 willalso close , the current in the vibrator exciter winding will

Declassified in Part - Sanitized Copy Approved for Release 2013/10/18 : CIA-RDP80T00246A071100330001-5

Declassified in Part - Sanitized Copy Approved for Release 2013/10/18 : CIA-RDP80T00246A071100330001-5

50X1-HUM

be reestabilished and the entire process will repeat.

The opening and the closing of the vibrator contacts takes place at a rate of 100 cps.

The are suppressor circuits. To protect the transformer windings against overvoltage and the remove the detrimental are effect on the vibrator contacts., the vibrator converter contains are suppressor circuits.

The are suppressor circuits function in the following way.

At the instant when the low voltage circuit contacts open (for example , the contacts 1-8) the entire energy of the electric current which flows after the circuits open , passes through the are suppressor circuit condeneer and thereby simultaneously prevent the arcing of the cintacts at the instant when these open.

During the time when the contacts move from one extreme position to the ether extreme position (at the instant when the contacts 7-8 closs) , the voltage of the oscillations on the transformer winding attains the value closs to the low voltage value (with the same polarity). Under these circumstances , the voltage on the contacts will not be great and , therefore , the closing of the circuit (closing of the contacts 7-8) will take place without arcing.

The are suppressor circuits of the main vibrator contacts 1-8-7 and 3-4 5 consists of the secondary transformer winding and the condenser 6 and the resistor 5.

The are suppressor circuit of the starter vibrater contacts 6-9 consists of the cindenser 15 and the resistor 5.

The are suppressor circuit components bear a certain relation between each other and are in a definite relation to the oscillation frequency and the closing time of the vibrator contacts.

Declassified in Part - Sanitized Copy Approved for Release 2013/10/18 : CIA-RDP80T00246A071100330001-5

Declassified in Part - Sanitized Copy Approved for Release 2013/10/18 : CIA-RDP80T00246A071100330001-5

50X1-HUM

The filters. To smooth out the ripples of the vibrator converter higher voltage current, the higher voltage cirdyit contains a low-pass filter consisting of the low frequency choke 11 and the condenser 9.

To prevent the possibility of the spreading of high frequency disterbances (the source of which is the vibrator) along the external circuits of the vibrator converter, the low voltage and the high voltage vibrator converter circuits contain high frequency low-pass filters. The high frequency filter in the low voltage circuit consists of a high frequency choke 3 and of the condebsers 1, 13 and 14. The higher voltage filter consists of the high frequency choke 10 and of the condenser 12.

3. Design features.

3. Design features.

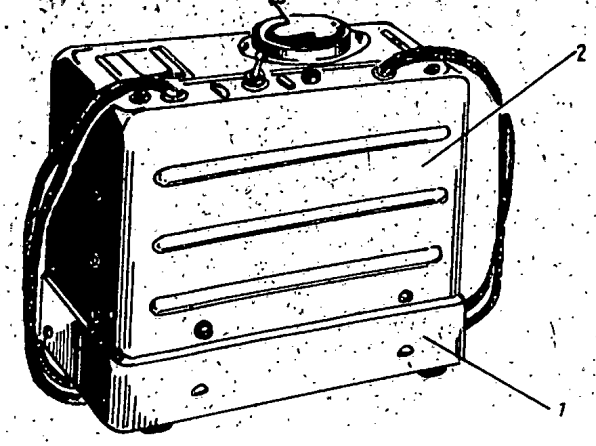

Fig. 5-20. The type B -10-12 vibrator converter (general view): 1.-horizontal panel (chassis); 2- housing (cover); 3-cap.

The vibrator converter B -10-12 (see fig. 5-20) is designed as a metal cabinet with all of its components contained inside.

All of the vibrator converter components are mounted on horizontal and vertical metal panels. The horizontal panel is designed in the shape of a chassis and serves as the foundation

Declassified in Part - Sanitized Copy Approved for Release 2013/10/18 : CIA-RDP80T00246A071100330001-5

Declassified in Part - Sanitized Copy Approved for Release 2013/10/18 : CIA-RDP80T00246A071100330001-5

50X1-HUM

for the whole vibrator converter structure. The vertical panel is screwed on to the horizontal panel by means of four screws.

The following components are mounted on top of the horizontal panel : the transformer 4 , the vibrator 7 , the low frequency choke 11 and on top of it the electrolytic filter condenser 9.

Below the horizontal panel are the electrolytic condensers-energy-accumulators 8 , the electrolytic filter condenser 14 , the filter condenser 13 and the arc suppressor circuits elements (the resistors 5 and the condensers 6 and 15.

The bottom of the horizontal chassis is enclosed by a removable cover.

The vertical panel (both of its sides) carries (see figures 5-21 and 5-22) the high frequency chokes 3 and 10 the filter condenser 1 and 12 and the toggle switch 2 ,
Besides these , there are the leads for connecting the vibrator converter to the low voltage supply (12 V) and to the high voltage (220 V) circuits in the remote control unit B Y.

The vibrator converter is wired with color coded conductors: The red conductors belong to the +220 V circuit , the blue conductors to the -220 V circuit , the yellow conductors to the +12 V circuit and the black conductors to the -12 V circuit.

All details are numbered in agreement with the vibrator connecter schematic diagram.

The horizontal and the vertical panels are enclosed by a metal cover (see fig. 5-20). The cover rests on the lip of the vertical panel to which it is fastened by three screws. The cover is also fastened to the horizontal chassis by eight screws.

Declassified in Part - Sanitized Copy Approved for Release 2013/10/18 : CIA-RDP80T00246A071100330001-5

Declassified in Part - Sanitized Copy Approved for Release 2013/10/18 : CIA-RDP80T00246A071100330001-5

50X1-HUM

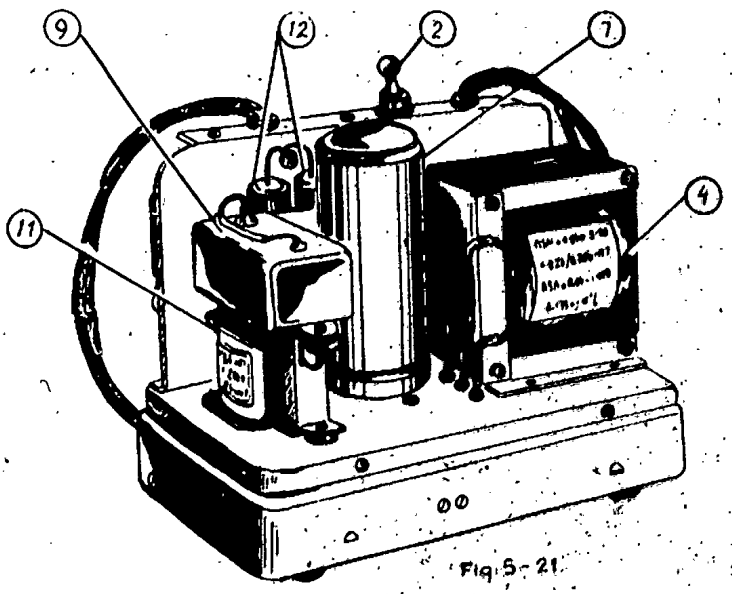

Fig. 5-21. The type B -10-12 vibrator converter (view of the chassis and the vertical panel from the vibrator side with the housing (cover) removed).

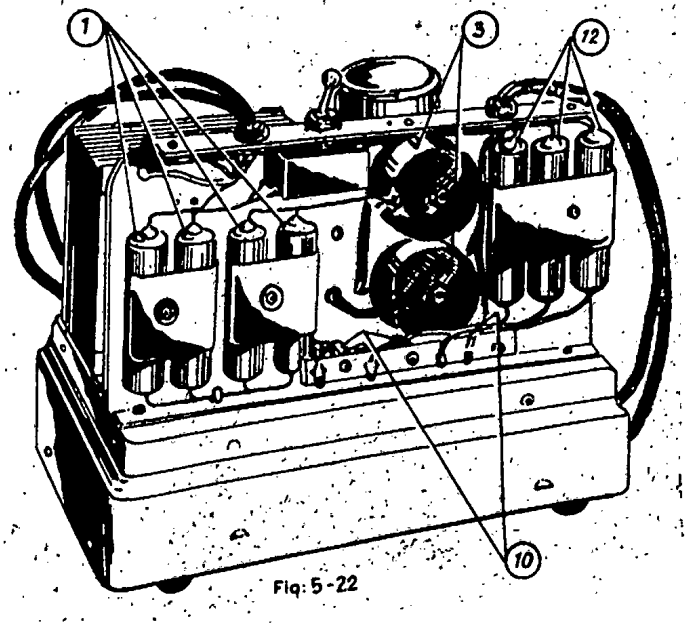

Fig. 5-22. The type B -10-12 vibrator converter (view of the verti panel with the housing (cover) removed).

The chassis and the cover make good electrical contact and thus from a good shield for the vibrator converter and prevent the possibility of direct radiation of high frequency disterbances generated by the vibrator , beyond the

Declassified in Part - Sanitized Copy Approved for Release 2013/10/18 : CIA-RDP80T00246A071100330001-5

Declassified in Part - Sanitized Copy Approved for Release 2013/10/18 : CIA-RDP80T00246A071100330001-5

50X1-HUM

vibrator connector housing.

The roof of the cover has three small openings (in one line) , two of which are used for the vibrator converterleads and the third one for the toggle switch. Besides these , there in another large opening for the replacement of the vibrator without the necessary of dismounting the cover.

This opening is covered with a cap attached to the cover by two screws. A brass spring is attached to the cap. This spring holds the vibrator in its place and connects the vibrator schield with the cover (which shields the antire vibrator.)

Declassified in Part - Sanitized Copy Approved for Release 2013/10/18 : CIA-RDP80T00246A071100330001-5

Declassified in Part - Sanitized Copy Approved for Release 2013/10/18 : CIA-RDP80T00246A071100330001-5

50X1-HUM

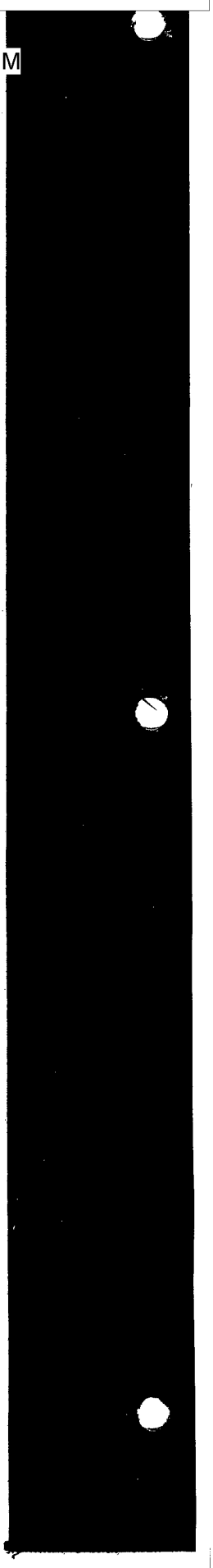

Declassified in Part - Sanitized Copy Approved for Release 2013/10/18 : CIA-RDP80T00246A071100330001-5

Declassified in Part - Sanitized Copy Approved for Release 2013/10/18 : CIA-RDP80T00246A071100330001-5

50X1-HUM

TECHNICAL DESCRIPTION AND INSTRUCTIONS FOR THE USE OF THE TYPE

R A S – U K V

RADIO COMMUNICATION UNIT

PART II

Pages 246–494

(English Language)

GROUP 1
Excluded from automatic downgrading and declassification

Declassified in Part - Sanitized Copy Approved for Release 2013/10/18 : CIA-RDP80T00246A071100330001-5

Declassified in Part - Sanitized Copy Approved for Release 2013/10/18 : CIA-RDP80T00246A071100330001-5
NO FOREIGN DISSEM

50X1-HUM

SECRET :

COPY :

TECHNICAL DESCRIPTION AND INSTRUCTION FOR THE USE OF THE TYPE

R A S - U K V.

RADIO COMMUNICATION UNIT

PART. II.

PAGES 246 - 494.

PRAGUE 1956.

NO FOREIGN DISSEM
Declassified in Part - Sanitized Copy Approved for Release 2013/10/18 : CIA-RDP80T00246A071100330001-5

Declassified in Part - Sanitized Copy Approved for Release 2013/10/18 : CIA-RDP80T00246A071100330001-5
NO FOREIGN DISSEM

CHAPTER 6.

50X1-HUM

Controling the radio communication unit.

6-1. General.

The radio communication unit (the transmitter, the receiving apparatus and the electric supplies) are controlled by operations during which the following takes place :

1. The selection of the control unit (radio van central control unit ..Y, or remote control unit B.Y).

2. The remote starting and stopping of the power plant engine.

3. Connecting and disconnecting the radio communication unit.

4. Switching and control of the radio communication unit supply circuits.

5. Selection of the desired mode of communication: ~~unitx~~ simplex, mechanical semi-duplex or duplex.

6. Change of the radiated transmitter power from the full (100%) power to the reduced (10 - 40%) power.

7. Selection and tuning of any of the ~~fmur~~ four pretuned and fixed transmitter and main receiver communication channels; selection and tuning of the auxilliary receiver communication channel.

8. Control of the transmitter audio frequency section (manual modulation level control, compensation (correction) of the frequency distortion taking place in the connecting line, etc.).

9. Transmitter modulation by means of the carbon microphone, throat microphone, or the TA - 43 field telephone set hand microphone.

10. Transition from transmission to reception and vice-versa.

11. Volume control .....

NO FOREIGN DISSEM
Declassified in Part - Sanitized Copy Approved for Release 2013/10/18 : CIA-RDP80T00246A071100330001-5

Declassified in Part - Sanitized Copy Approved for Release 2013/10/18 : CIA-RDP80T00246A071100330001-5
NO FOREIGN DISSEM

50X1-HUM

11. Volume control of the signals received by the receivers and reproduced by the headphones and by the dynamic loudspeakers.

The radio communication unit may be controlled from two units:

1) directly from the respective units and the control equipment in the radio van, or

2) remotely - via the connecting line conductors - from the remote control apparatus (B.Y).

The radio communication unit control organs consist of relays, contactors, electric motors, selector switches, toggle switches, knobs, etc.

The selector switches, toggle switches, knobs and controllers are located on the respective units and control panels. Only one operation ; the transition from transmission to reception during semi-duplex communication - is controlled by pressing the push-button on the microphone handle or on the cord switch of the throat microphone or finally by the switch in the handphone of the field telephone set TA - 43 (the last one only when operating from the remote control unit B.Y).

The control circuit relays operate on 26V and 180 V.

Some of the operations, such as

- the remote starting and stopping of the power plant engine.
- the connecting and disconnecting of the radio communication unit and
- the tuning of the pretuned and fixed communication channels (frequencies),

are performed automatically: it is sufficient to press the proper push-button on the respective unit.

SECRET
NO FOREIGN DISSEM
Declassified in Part - Sanitized Copy Approved for Release 2013/10/18 : CIA-RDP80T00246A071100330001-5

Declassified in Part - Sanitized Copy Approved for Release 2013/10/18 : CIA-RDP80T00246A071100330001-5
NO FOREIGN DISSEM

50X1-HUM

A. Control of the radio communication unit from the radio van.

All of the radio communication unit control operations named at the beginning of this chapter are controlled from the following components in the radio van:

1. From the central control apparatus (..Y) and from the first transmitter section.

2. From the common panel of the receivers.

3. From the dynamic loudspeaker panel.

4. From the auciliary receiver panel.

5. From the rectifier BCP-6. panels.

6. From the charger rectifier and from the distribution cabinet panels.

The operations performed from the panels of the radio receiver apparatus and from the panels of the supply units were taken up in detail in the Chapters 3 and 5. Most of these operations are quite simple and easily understand able.

The control operations performed from the central control unit ..Y are diverse, the connection sequence during some of the operations is rather complicated and therefore requires close detailed explanation.

One operation is performed from the first transmitter section, namely the control of the rectifier BCP-6.. - the connecting of the + 300 V, - 300 V, 600 V and 1,35 kV supply rectifiers.

6-2. The central control unit (..Y).

1. General.

The following control operations are concentrated in the central control unit:

1. The main radio communication unit control components,

including the .....

SECRET
NO FOREIGN DISSEM
Declassified in Part - Sanitized Copy Approved for Release 2013/10/18 : CIA-RDP80T00246A071100330001-5

Declassified in Part - Sanitized Copy Approved for Release 2013/10/18 : CIA-RDP80T00246A071100330001-5
NO FOREIGN DISSEM

50X1-HUM

including the jacks for x connecting the headphones, and the throat microphone (separate or as a part of the helmet) connector (via the cord switch).

2. The control components for the compensation (correction) of the frequency distortion which takes place in the transmitter audio frequency circuit section; the control in the main receiver output circuit.

3. The electric measuring instruments for the control of the audio frequency signal applied to the transmitter audio frequency section and for the control of the modulator vacuum tube anode current; jacks for connecting the headphones by which the transmitter is monitored ("listening in" to the transmitter).

4. The pilot lamps for signaling the state of the remote control components, or for signaling the transmitter control operations.

5. The control circuit components, the microphone circuit components and the main receiver output components (condensers, chokes, resistors, etc.).

2. The schematic diagram.

The central control unit U.Y switching components are described below in the detailed description of the control operations performed from the unit.

The following components belong to the control apparatus (see the central control unit schematic diagram in the appendix):

- the manual modulation level control (PP.M) R 410,
- the variable resistor R 44 for adjustment of the delayed detector voltage (AP.M),
- the equilizing network for the compensation (correction) of the frequency .....

SECRET
NO FOREIGN DISSEM
Declassified in Part - Sanitized Copy Approved for Release 2013/10/18 : CIA-RDP80T00246A071100330001-5

Declassified in Part - Sanitized Copy Approved for Release 2013/10/18 : CIA-RDP80T00246A071100330001-5
NO FOREIGN DISSEM

of the frequency distortion which takes place in theconnecting line from the remote control unit B.Y, and

- the variable resister R409 for volume control of the signals received by the main or auxilliary received, which are reproduced by the headphones plugged into the "T" (P401) jack or the connector F403 (the helmet phone).

The following components belong to the transmitter audio frequency section signal control:

- the milliameter ..401 whose scale is graduated in volts,
- the toggle switch ..408-2 and
- the resistors R.408-1 and R 412.

These components belong to the circuit of the vacuum tube voltmeter which has been described in Chapter 2.

The ammeter ..402 with the toggle switch ;408-1 are the components used for checking the anode x current of the modulator x vacuum tube.

The headphones for monitoring the transmitter are connected to the jack "K" (.401-2).

The pilot lamps signalize:

- the selected control unit (the central) control unit B.Y in the radio van, or the remote control unit B.Y),
- the selected mode of communication (simplex, semiduplex, duplex),
- the selected transmitter and main receiver communication channel ("1", "2", "3", "4").
- The 43-contact section (.405) of the connecting terminal boards .404-.405 connects the central control unit ..Y to the transmitter rack, and the 7-contact section of the x same terminal board (.404) connects the central control unit ..Y to the modulator block.

The 26 V voltage for supplying some of the relay and contactor control .....

Declassified in Part - Sanitized Copy Approved for Release 2013/10/18 : CIA-RDP80T00246A071100330001-5

Declassified in Part - Sanitized Copy Approved for Release 2013/10/18 : CIA-RDP80T00246A071100330001-5
NO FOREIGN DISSEM

50X1-HUM

contactor control circuits as well as for supplying the carbon microphone or throat microphone and pilot lamps is connected to the unit only after the "_____" ("power line-off-power-plant") selector switch (.302) on the rectifier BCP-6.. block #5 panel is set to the "....." ("power line") or "ARPERAT" ("power plant") position (with the battery set connected) and the "_____" ("radio communication unit supply switch") (..317) on the block #4 panel is set to the "...." ("on") position.

The 180 V voltage from the control circuit rectifier is connected to the unit only after the "_____" ("power-line-off-power plant") selector switch has been set to the "...." ("power line") or the "ARPERAT" ("power plant") position.

3. Design features.

The central control unit ..Y has been designed as a block, which, when connected with the modulator block, forms the second section of the transmitter with the central control unit block ..Y taking up the whole front section in the transmitter rack space for these two units.

The coupling of the central control unit block ..Y with the modulator block is accomplished by screws and also by means of the connecting terminal boards.

The central control unit consists of:

- the control panel,
- the relay and choke block, and
- the equilizing network block.

On the control panel are located the selector switches (rotary selector switches, push-buttons, toggle switches), controls, and jacks for connecting the headphones and microphone, the connector for connecting the helmet phone, two

meters .....

NO FOREIGN DISSEM
Declassified in Part - Sanitized Copy Approved for Release 2013/10/18 : CIA-RDP80T00246A071100330001-5

Declassified in Part - Sanitized Copy Approved for Release 2013/10/18 : CIA-RDP80T00246A071100330001-5
NO FOREIGN DISSEM

50X1-HUM

Fig. 6-

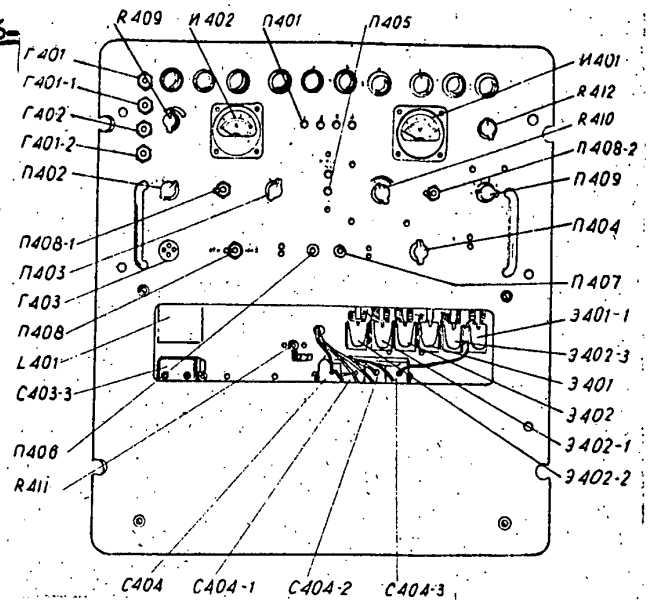

Fig. 6-1. Central control unit (.,Y) (front view with the cover of the cut-out removed).

phone, the connector for connecting the helmet phone, two meters (ammeter and voltmeter), the compensating network and ten pilot lamps (see fig. 6-1).

The lower part of the control unit contains the relay and choke block.

On the front side of the panel are the knobs and the selector switch knobs, the control handles, the toggle switch handles, the jacks for connecting the headphones and the microphone, the connector, the meters and the colored lenses of the pilot lamps. Besides these a pair of handles is fastened to the front panel for pulling the second section out of the transmitter rack. Facing the relay and choke block is a cut (window) in the panel which is covered by a cover.

Above all of the handles, knobs, & jacks, meters, etc., are inscriptions.

The relay and choke block contains the relays of the unit condensers, terminal strips with resistors, the detector

time delay .....

Declassified in Part - Sanitized Copy Approved for Release 2013/10/18 : CIA-RDP80T00246A071100330001-5

Declassified in Part - Sanitized Copy Approved for Release 2013/10/18 : CIA-RDP80T00246A071100330001-5
NO FOREIGN DISSEM

time delay control of the automatic modulation level con50X1-HUM (AP.M) and the connecting terminal board ..404-..405 for connecting the unit to the modulator block and to the transmitter rack. Access to the relay contacts and to the shaft of the time delay control of the automatic modulation level control (AP.M) is enabled through the cut out (window) in the control panel.

The equilizing network block consists of the selector switch (.409), of two sets of induction coils and of two panels with condensers and resistors. All of these are mounted on a foundation which is screwed on to the central control unit ..Y panel. The network is covered with a shield cover.

All components of the units are marked in agreement with the notation used in the schematic diagrams.

The central control unit block wiring side is covered with a shield.

6-3. Control operations performed from the central control unit ..Y.

1. Selection of the control unit (the central control unit ..Y in the radio van, or the remote control unit ..B.Y).

2. Remote starting and stopping of the power plant engine.

3. Connecting and disconnecting the radio communication unit.

4. Selection of the desired mode of communication.

5. Change of the radiated transmitter power from full power (100%) to reduced power (10 tp 40%).

6. Selection of any of the four transmitter and main receiver .....

SECRET
NO FOREIGN DISSEM
Declassified in Part - Sanitized Copy Approved for Release 2013/10/18 : CIA-RDP80T00246A071100330001-5

Declassified in Part - Sanitized Copy Approved for Release 2013/10/18 : CIA-RDP80T00246A071100330001-5
NO FOREIGN DISSEM

lamps ..401 ("B..") ("portable receiver control unit") ..401-1 ("..Y") ("central control unit") and .401-2 ("B.Y")("remote control unit").

With the selector switch switched from one position to another one, the output circuits of the main receiver, the input circuits of the transmitter audio frequency section, the supply circuits of the remote (from the central control unit ..Y or from the remote control unit ..B.Y) control, the circuits of the communication channel selector relay, the reception-transmission relay circuit and the pilot lamp supply circuits are switched too.

Further operations which are performed from the central control unit ..Y are described below.

2. REMOTE STARTING AND STOPPING OF THE POWER PLANT ENGINE.

The remote starting and stopping of the power plant engine is accomplished by means of two momentary contact push-buttons (..406 and .407) on the panel of the central control unit. Above these push-buttons are these inscription: "ARPERAT" ("power plant"), "...." ("start") - "_____" ("stop").

To start the engine the push-button "...." ("start") (.406) must be pressed. Thereby two series connected relays (coils) -) 313-1 and -)313-2 are energized in the power plant and their contacts close (see fig. 6-2).

The relay -) 313-1 contacts connect the starting battery .301 to the coil of the starter contactor -) 320. The energized starter contactor closes its contacts and the starter battery is thus connected to the starter electric motor M 307. The starter couples itself to the engine and starts cranking the

engine of .....

NO FOREIGN DISSEM
Declassified in Part - Sanitized Copy Approved for Release 2013/10/18 : CIA-RDP80T00246A071100330001-5

Declassified in Part - Sanitized Copy Approved for Release 2013/10/18 : CIA-RDP80T00246A071100330001-5
NO FOREIGN DISSEM

50X1-HUM

engine of the power plant.

The closed contacts of the energized relay -0 313-2 connect the 26 V circuit to two other relays (to the relay -)314-1 for connecting the ignition circuit and to the self;interlocking relay -)314-2) and these energized relays operate their contacts.

By energizing the relay -)314-1 its contacts open and disconnect the circuit which shunts the low voltage winding of the magneto transformer (and there by connect the ignition). The ignition system can now operate in the usual way and assure the ignition of the engine.

When the relay -)314-2 was energized, its contacts closed and formed a circuit which shuts the contacts of the relay +)313-2, i.e. connect the relay to a self-interlocking circuit.

Then the push-button "_____" ("start) (..406) may be released. As a result of this, the relays -)313-1 and -)313-2 are deenergized, and open their contacts, but the relays -)314-1 and +)314-2 will remain energized and the circuit which shuts the low voltage winding of the magneto transformer remains open. This ends the remote starting of the power plant engine.

To stop the engine it is sufficient to press the "_____" ("stop") push-button (..407). The relays -)314-1 and -)314-2 are thereby deenergized, and the contacts of the relay -)314-1 x close, whereby the circuit shunting the low voltage magneto transformer winding closes. The ignition is thus turned off and the engine stops.

Note: It is apparent from the schematic diagram (see fig. 6-2) that it is possible to stop the engine from the central control unit ..Y only in the case when the toggle switch .328 is in the "B...." ("off") position. If this is not the case, the engine cannot be stopped from the central control unit ...Y.

3. Connecting .....

SECRET
NO FOREIGN DISSEM
Declassified in Part - Sanitized Copy Approved for Release 2013/10/18 : CIA-RDP80T00246A071100330001-5

Declassified in Part - Sanitized Copy Approved for Release 2013/10/18 : CIA-RDP80T00246A071100330001-5
NO FOREIGN DISSEM

3. Connecting and disconnecting the radio communication unit.

This operation is performed by pressing the button of the twin push-button switch 405.

Above the knobs on the panel are the inscriptions: "_____ _____" ("radio communication unit"). "_____" ("on") - "_____" ("off").

When the " " ("on") button is pressed the followihg circuit is established (see the radio communication unit control schematic diagram): + 26 V (contact 52 of the terminal board 405), one pair of contacts of the " " ("on") button, the contacts 43 of the terminal board 405, the vacuum tube filament interlocking contacts on the terminal board 315, the contacts of the "_____ _____" ("time delay") automat 901 and the terminals 43 of the terminal board 901, the cable from the transmitter to the rectifier BCP-66 , the terminals 43 of the terminal board 311, of this rectifier. In the latter the +26 V is connected to the contactor 301 which turns on the rectifier BCP-66. A detailed description for turning the rectifier BCP-66 on is given in Chapter 5.

The other pair of contacts of the "BK." ("on") button connects the automat 901 relay coil to the frame.

The radio communication unit is turned off by pressing the "_____" ("off") button of the switch 405. The " " ("on") button jumps out and above mentioned 26 V circuit opens and the radio communication unit is turned off.

4. Selection of the mode of communication and transition from reception to transmission.

The modes of communication of the radio communication unit as follows : 1. Simplex .....

Declassified in Part - Sanitized Copy Approved for Release 2013/10/18 : CIA-RDP80T00246A071100330001-5

Declassified in Part - Sanitized Copy Approved for Release 2013/10/18 : CIA-RDP80T00246A071100330001-5
NO FOREIGN DISSEM

50X1-HUM

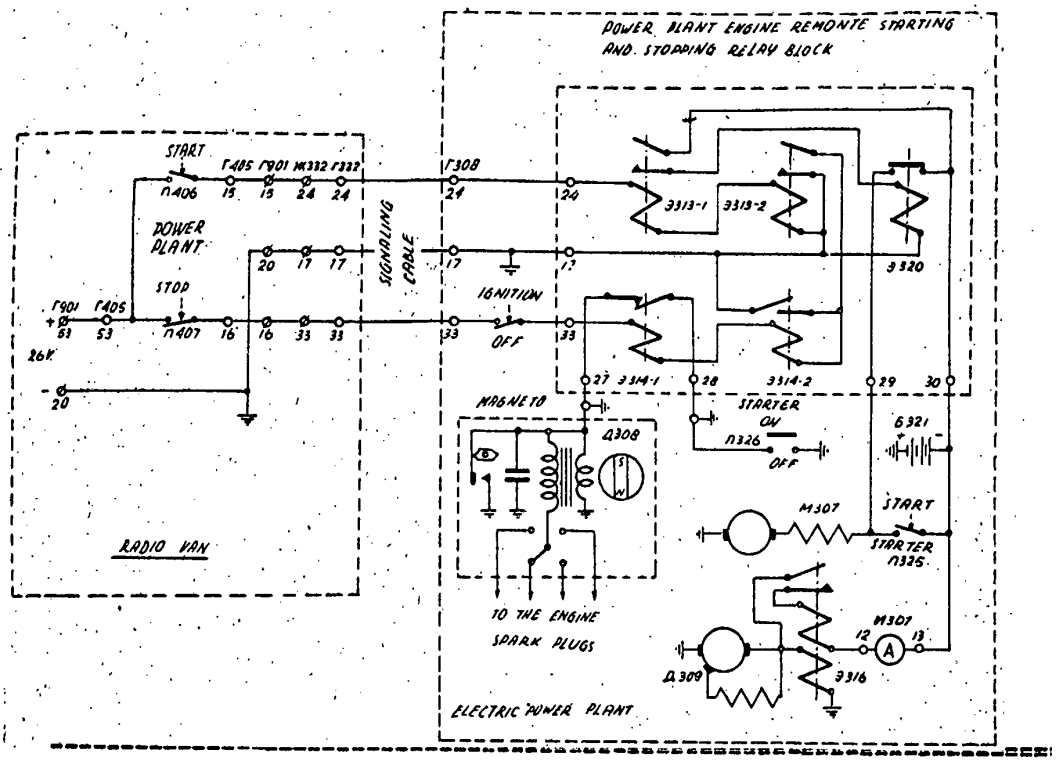

Fig. 6-2. The schematic diagram of the circuits for starting and stopping the power plant engine from the contral control unit U N Y.

unit are as follows:

1. Simplex.

2. Mechanical semi-duplex - with the transmitter and main receiver operating with a common antenna on the principle : with the microphone push-button depressed - transmission; with the push-button released - reception.

3. Duplex - this is possible only when the completary apparatus is available - the portable reception equipment which is equipped with a special antenna system.

The selection of the desired mode of operation is made by means of the selector switch 404 which may be set to three positions (see the radio communication unit control circuit schematic diagram).

On the panel above the knob of the selector switch 404 are these inscriptions: "_____" ("mode of communication")

"C" ("simplex") .....

SECRET
NO FOREIGN DISSEM
Declassified in Part - Sanitized Copy Approved for Release 2013/10/18 : CIA-RDP80T00246A071100330001-5

Declassified in Part - Sanitized Copy Approved for Release 2013/10/18 : CIA-RDP80T00246A071100330001-5
NO FOREIGN DISSEM

50X1-HUM

"C" ("simplex"), " " ("semi-duplex"). " " ("duplex")

Transition of the radio communication unit operation from reception to transmission and vice versa is accomplished by means of the reception-transmission relay which consists of the electromagnetic relay -)102 and of the type B..-2 vacuum selector switch (..108).

The control (energizing and deenergizing) of the relay -)102 is accomplished by means of the mode of communication selector switch in case of simplex communication, and by means of the push-button on the microphone handle, or the push-button of the throat microphone cord switch in case of semi-duplex x communication.

With the relay -)102 energized, the sustem is set for transmission, with the relay deenergized, the system is set for reception.

When the relay -)102 is energized, the movable contact of the vacuum selector switch (..108) connects the antenna to the transmitter and disconnects it from the receiverl

Besides this, the relay -)102 contacts, when the relay is energized, perform the following operations:

1) connect the chassis (the negative potential of the anode voltage) tothe cathode of the crystal oscillator-doubler vacuum tube (..101);

2) short circuit the resistor R-151-6 in the bias voltage divider of the transmitter and connect the chassis to the modulator bias potentiometer resistor R-148, as a result of which the bias is reduced on the control grids of all transmitter vacuum tubes, these tubes are unblocked and thus the transmitter is unblocked too;

3) disconnect the common point of the receiver bias voltage divider resistors R.277, R-279 and R-238 from the chassis,

SECRET
NO FOREIGN DISSEM
Declassified in Part - Sanitized Copy Approved for Release 2013/10/18 : CIA-RDP80T00246A071100330001-5

Declassified in Part - Sanitized Copy Approved for Release 2013/10/18 : CIA-RDP80T00246A071100330001-5
NO FOREIGN DISSEM

as a result of which the bias increases on the control grids of all receiver vacuum tubes (with the exception of the vacuum tubes ..209 and ..210 of the audio frequency amplifier) and the receiver is blocked.

With the relay -)102 deenergized, the antenna is connected to the receiver.

Besides this, when the relay -)102 is being deenergized, it performs the reversed operations to those described above, namely:

1) disconnects the cathode of the vacuum tube ..101 from the chassis;

2) connects the high resistance resistor R-151-6 into the bias voltage divider and also disconnects the chassis from the resistor R-148 of the modulator bias potentiometer, as a result of which the bias increases on the control grids of all transmitter vacuum tubes (with the exception of the crystal oscillator-doubler vacuum tube (..101) and the transmitter is blocked;

3) connects the common point of the receiver bias voltage divider resistors R-277, R 279 and R 238 to the chassis; the control grids thus receive the normal bias and the receiver is unblocked.

With the mode of communication selector switch ..404 in the "C" ("simplex") position (simplex, special communication) the contacts of its "___"deck energize the pilot lamp ..401-7 with which the dropping resistor R 407-3 is connected in series. The contacts of its deck "a" close the supply circuit of the relay -)102 coil. The relay is thus energized and switches the radio communication unit to transmission.

When the selector switch ..404 is turned to the "_____" ("semi-duplex") position, the pilot lamp ..401-1, with the series connected ....

Declassified in Part - Sanitized Copy Approved for Release 2013/10/18 : CIA-RDP80T00246A071100330001-5

Declassified in Part - Sanitized Copy Approved for Release 2013/10/18 : CIA-RDP80T00246A071100330001-5
NO FOREIGN DISSEM

50X1-HUM

series connected dropping resistor R-407-2, circuit is connected by the ..404 deck "_____" contacts, the selector switch ..402 deck "___" contacts and the normally closed contacts 3-4 of the re lay -)402; but the selector switch ..404 deck "a" contacts do nót complete the supply circuit of the relay -)102 and this then opens and connects the radio communication u it for reception.

From the schematic diagram of the radio commu ication unit control circuit it is apparent that to achieve simplex communiw cation, the mode of communication selector switch must be set to the "C" ("simplex") position when transmitting and to the " " ("semi-duplex") position when receiving.

When the special apparatus is operating with this mode of communication (simplex communication) no switching is performed.

It is necessary to modulate the transmitter with the carbon microphone, or the throat microphone with mode of operation, which is being described (simplex communication) it is necessary to press the push-button on the microphone handle or the push-buttom of the throat microphone cord switch when transmitting. This is required in order to complete the carbon or throat microphone supply circuit.

For the mechanical semi-duplex communication, the mode of communication selector switch must also be turned to the " " ("semi-duplex") position.

Transition from reception to transmission is then achieved by means of the push-button on the microphone handle or on the throat microphone cord switch.

When the push-buttom is depressed, the relay -)102 is energiz zed and the carbon microphone or throat microphone supply circuit will be closed.

Its is obvious that after pressing the push-button one may transmit.

When the push-button .....

Declassified in Part - Sanitized Copy Approved for Release 2013/10/18 : CIA-RDP80T00246A071100330001-5

Declassified in Part - Sanitized Copy Approved for Release 2013/10/18 : CIA-RDP80T00246A071100330001-5
NO FOREIGN DISSEM

50X1-HUM

When the push-button is released, the relay -)102 will become energized and the carbon microphone and throat microphone circuits will open.

It is obvious that after the push-button has been released it is possible to receive.

Besides using the simplex communication and the semi-duplex communication. the radio communication unit may also operate with duplex communication.

Duplex communixation can be used only, as was mentioned already previously, when the radio communication unit is equipped with portable reception apparatus (B...) which is equipped with a special system.

5. Changing the power radiated by the transmitter.

This operation is performed by switching the toggle switch 408. Above the toggle switch on the panel are the inscriptions: "....." ("power"), "25%" - "100%".

To reduce the power radiated by the transmitter from the full (100%) to the(reduced (10 to 40%) level, the toggle switch must be set to the "25%" position. Thereby the following circuit is completed (see fig.6-3): +26 V from the contact 52 of the terminal board (405 is led over the toggle switch (408 contacts, over the contacts 42 of the terminal boards (405,(901 and (311 across the contactor -)304 coil to the cahssis ("ground").
The contactor-selector +)304 becomes energized and its contacts reconnect the 1.35 kV rectifier primary transformer T302 winding from delta to star. The voltage supplied by the rectifier is thus reduced to 750 V and the transmitter power is thereby reduced.

6-4. The transmitter ...

SECRET
NO FOREIGN DISSEM
Declassified in Part - Sanitized Copy Approved for Release 2013/10/18 : CIA-RDP80T00246A071100330001-5

Declassified in Part - Sanitized Copy Approved for Release 2013/10/18 : CIA-RDP80T00246A071100330001-5
NO FOREIGN DISSEM

50X1-HUM

6-4. The transmitter and receiver automatic tuning system control.

1. General.

The automatic tuning control system is an electromechanical apparatus which enables to electrically control by mechanical motion the tu ing elements of the transmitter and of the receiver.

The tuning of any one of the pretuned and secured communication channels (wave lengths) is thereby guaranteed. The combination of the four pretuned communication channels is immaterial within the communication range.

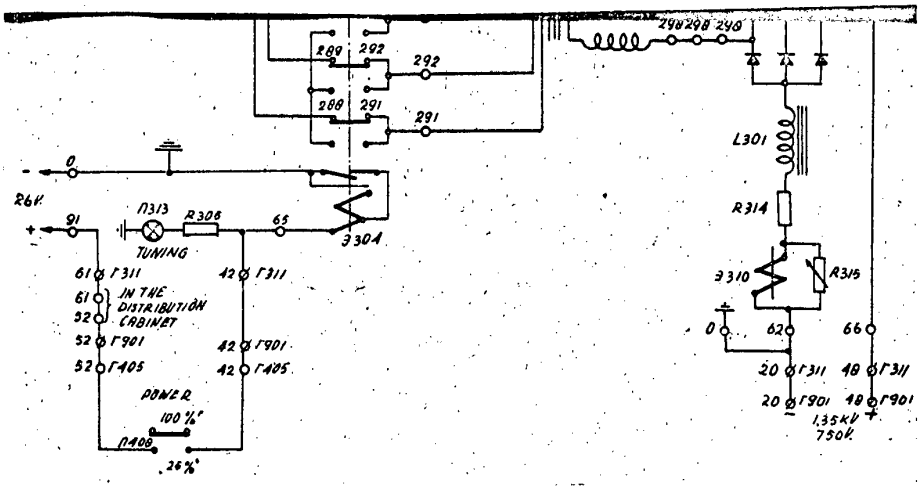

Fig. 6-3. The schematic diagram of the circuit for switching the transmitter output power.

The automatic tuning is performed by pressing one of the four push-buttons of the 4-push-button selectors which are located on the ....

Declassified in Part - Sanitized Copy Approved for Release 2013/10/18 : CIA-RDP80T00246A071100330001-5

Declassified in Part - Sanitized Copy Approved for Release 2013/10/18 : CIA-RDP80T00246A071100330001-5
NO FOREIGN DISSEM

50X1-HUM

located on the central control panel, on the remote control panel (B..Y or B....), on the auxilliary receiver control panel and on the measuring instrument.

The time reguired for the automatic tuning of any communication channel of the transmitter is 10 seconds and of the receiver is less than 10 seconds.

2. The transmitter automatic tuning control system (the autotune).

General. The automatic tuning control system (further called "the autotune") consists of six automatic mechanisms (further called "the autotune heads") "1", "2","3","4","5" and "6" which can rotate only through one revolution.

The autotune heads are coupled to the variable (tuning) condensers of the transmitter high frequency section stages.
The numbers of the autotune heads correspond to the numbers of the stages whose condensers it(the autotune head(rotates.

All autotune heads are driven by a single type AY-40 electric motor by means of worm and gear transmissions.

Strict synchronization of the motion of the autotune heads is reguired for their proper functioning.

The autotune heads will further be called by numbers which correspond to the designation of the tuned elements.

The autotune heads "1","2","3", and "4" are alike and they are interchangeable.

The autotune head "5" differs from the first four by having a prolonged shaft for controlling the"seeking" selector switch 106.

The autotune head"6" contains complementary equipment for controlling the limit switch 104 and the limit switch 105.

SECRET
NO FOREIGN DISSEM
Declassified in Part - Sanitized Copy Approved for Release 2013/10/18 : CIA-RDP80T00246A071100330001-5

Declassified in Part - Sanitized Copy Approved for Release 2013/10/18 : CIA-RDP80T00246A071100330001-5

The tuning control by means of the autotune is accomplished by a system of electrical elements which consists of the following major components:

1) the communication channel selector switch 401 (on the central control panel, 601 (on the remote control panel), of 501 (on the portable reception apparatus) for the selection of the desired (pretuned) communication channel by the operator;

2) the "seeking" selector switch 106 controlled by the autotune head "5" which is used for setting the cam drum to the position which determines the engagement of the respective channel number pawl selected by the selector switch 401;

3) the limit switch 104 and the switch 105 controlled by the autotune head "6" which determine the operating time of the system, the moment of reversation and the end of the operation;

4) the relay 104 controlled by the starting and by the direction of rotation of the autotune motor M 101;

5) the "_____" ("control unit") selector switch 402 which selects the control from either the central control unit, from the remote control unit of from the portable reception apparatus and vice versa;

6) the communication channel selector relays 402-1 and 402-2 which control the supply circuits of the relay 104.

For the proper functioning of the automatic tuning control, the seeking" selector switch must be synchronized with the autotune heads, and the swi ches 104 and 105 must be adjusted to the limiting positions of the entire autotune operating cycle.

The adjustment of the transmitter tuning elements to the preselected position id characterized by a high degree of accuracy.

The accuracy of the .....

Declassified in Part - Sanitized Copy Approved for Release 2013/10/18 : CIA-RDP80T00246A071100330001-5

Declassified in Part - Sanitized Copy Approved for Release 2013/10/18 : CIA-RDP80T00246A071100330001-5
NO FOREIGN DISSEM

50X1-HUM

The accuracy of the successive automatic tuning is greater than the possible accuracy of manual tuning. Thus the tuning accuarcy depends on how precisely the manual tuning was performed during the original tuning, i.e. it depends on strict adherence to the rules listed in the second section of this manual.

The principle of the autotune operation. The transmitter tuning corresponds to a limited position of the knobs "1","2", "3", "4", "5" and "6". Obiviously, the purpose of each autotune head is to adjust the respective knobs and thereby the shaft of the tuning element to the previously tuned and secured position.

For better understanding of the mode of the autotune head operation, we shall first consider a simplex unit a which permits to tune and secure only a single channel (see fig. 6-4).

The shaft of the tuning element is rotated by a friction clutch which permits the cluth to stop while the electric motor keeps on turning.

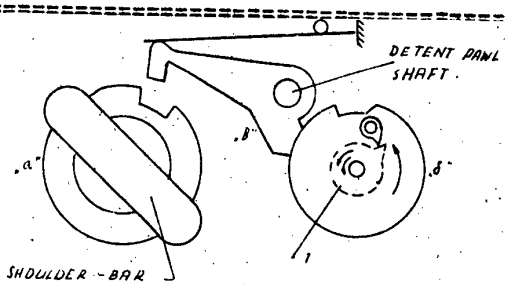

Fig. 6-4. Locking device of the autotune.

The ring "a" with a detent is riggidly fastened to the tuning element shaft. The tuning element shaft ~~xxxxxxxx~~x rotates freely until it is stopped in the extreme tuning shaft positions by end stops, or until the detent pawl "___" engages the detent in the ring "a" and thereby stops it from further ~~xxxxxxx~~x turning.

The detent pawl.....

SECRET
NO FOREIGN DISSEM
Declassified in Part - Sanitized Copy Approved for Release 2013/10/18 : CIA-RDP80T00246A071100330001-5

Declassified in Part - Sanitized Copy Approved for Release 2013/10/18 : CIA-RDP80T00246A071100330001-5
NO FOREIGN DISSEM

50X1-HUM

The detent pawl "_____" can engage the detent in ring "A" only when its right hand side extention engages the detent in the cam "_____".

The operation of the autotune head consists of two cyclos. During the first cycle, the tuning element shaft together with its ring "a" and also the cam "_____" rotate counter-clockwise. The shaft with the ring "a" rotates until the end-stop stops it in the extreme position, where upon the friction clutch starts slipping and the tuning shaft does not rotate. The other parts rotate counter clockwise up to a moment determined by the electric circuit of the autotune system. At that moment the direction of rotation reverses and the second cycle of the autotune starts. The cam "____" is rotated by the one-way ratchet pawl "1" and t herefore, when the direction of rotation is reversed the cam "___" will not rotate, i.e. remains at stand-still in the position which it assumed during the reversal of rotation.

Two cases may now take place:

1) the cam "__" remains in such a position that the right hand side end of the detent pawl "_____" will rest against the cylindrical surface of the cam;

2) the cam "____" remains in such a position that the right hand side end of the detent pawl "___" will engage the detent in the cam "____".

In the first case , the ring "a" cannot engage the pawl "_____" and may rotate freely (unless it is stopped for some other reason). In the second case, the left hand side end of the pawl "___" will ride (by the action of the spring) on the cylindrical surface of the clockwise rotating ring "a" until the pawl engages the detent in the ring "a". The rotation of the ring "a" and of the tuning element shaft is thus stopped in the position determined by the relative position..

SECRET
NO FOREIGN DISSEM
Declassified in Part - Sanitized Copy Approved for Release 2013/10/18 : CIA-RDP80T00246A071100330001-5

Declassified in Part - Sanitized Copy Approved for Release 2013/10/18 : CIA-RDP80T00246A071100330001-5
NO FOREIGN DISSEM

50X1-HUM

of the shaft and the ring which corresponds to any desired tuning.

In order to be able to change the tuning, it is necessary to alter the relative position of the ring "a" on the shaft. Under such a condition, the ring always remains in one and the same position with its detent facing upwards and the shaft may be adjusted to the necessary position.

This may be accomplished in the following manner; the ring "a" may either rotate freely on the shaft or may be firmly connected with it.

Let us now annalyze figure 6-5, which shows the tuning element shaft "1", the detent ring "2" (ring "a" in figure 6-4) which rotates freely on the shaft "1"; the washer with a key "3" which is free on the shaft "1" but rotates with it; the key "4" which can slide in the slot of the shaft; and the locking (securing) screw "5".

When the screw "5" is completely tightened, it will, by means of the key "4", firmly tighten the detent ring "2" between the washer "3" and the shoulder of the shaft "1". Obviously, the detent ring "2" is then firmly held on the shaft and the shaft can rotate only with the detent ring. When the screw "5" is loosened, then the coupling between the detent ring "2" and the shaft 1" is interrupted and the shaft may rotate freely within the stationary detent ring.

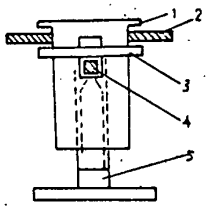

Fig. 6 - 5. Function of the autotune head locking screw:
1.-the shaft of the tuned element; 2-the detent ring; 3- washer with a key; 4- the key; 5- the locking screw.

In this way it is possible to adjust the tuning shaft of the autotune heads in any position...

SECRET
NO FOREIGN DISSEM
Declassified in Part - Sanitized Copy Approved for Release 2013/10/18 : CIA-RDP80T00246A071100330001-5

Declassified in Part - Sanitized Copy Approved for Release 2013/10/18 : CIA-RDP80T00246A071100330001-5

heads in any position within the range of 90° for the autotune heads "1", "2" and "4" and within the range of 180° for the autotune heads £3", "5" and £6£.

Having explained a simple mode enabling the securement of only one channel (tuning), it is not difficult to pass over to a multi-channel system.

In this case it is necessary to place on the tuning shaft not only one detent ring, but several. This actually done in the radio communication unit autotune heads. Washers with keys (similar to the washer "3" in fig. 6-5) are placed on the shaft between the detent ring in order to distance the detent rings from each other These washers rotate with the shaft. This way each detent ring has its own location and is independent of the other detent rings. With the securing ("screw") ("3") in fig. 6-5) tightened in place, the whole system is strongly compressed, i.e. all of the detent ings are firmly coupled to the shaft; with the securing screw loosened, all of the detent rings are free to rotate on the shaft. Opposite each detent rings its own detent pawl and each detent pawl has its own cam "____" (see fig. 6-4). The assembly of the cams "____" form the pawl selector cam drum. The detents in the pawl selector drum are arranged in such locations that only one pawl can enter a detent at one time.

The description given below will acquaint us in greater detail with the equipment and its mechanical components.

The kinematic diagram of the automatic tuning system.

Figure 6-6 shows the kinematic diagram of the autotune heads and their drive and figure 6-7 shows the autotune heads alone. In the further description the designation of the autotune components will be kept in agreement with the designations (numbers) used in the kinematic diagram.

Declassified in Part - Sanitized Copy Approved for Release 2013/10/18 : CIA-RDP80T00246A071100330001-5

Declassified in Part - Sanitized Copy Approved for Release 2013/10/18 : CIA-RDP80T00246A071100330001-5
NO FOREIGN DISSEM

50X1-HUM

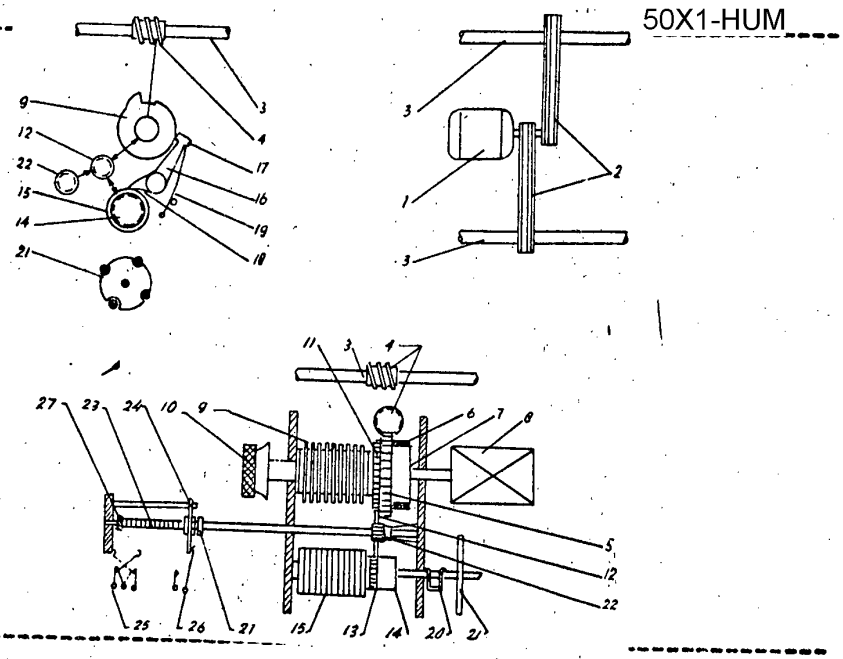

Fig. 6 - 6. Kinematic diagram of the autotu e heads and their drive: 1-electric motor of the automatic tu ing system;2-transmission chain; 3-shaft; 4-single thread worm;3-worm transmission of the pag type friction clutch; friction clutch; 8-tuned element (variable condenser); 9-drum with a set of stop-cam rings and flexible 12 idler gear; 13-pawl selector cam drum gear; 14-one-way pawl; 15-pawl selector cam drum; 16-selector pawl; 17-tooth of the selector pawl; 18-extention of the selector pawl; 19-selector pawl spring; 20-"seeking" selector switch connecting rod; 21-"seeking" selector switch ~~xxxxxxx~~ xingxrod; 22-gear transmission of the lead screw; 23-lead screw of the limit switches; 25-limit transfer switch; 26-limit switch; 27-limit stop of the limit switch mechanism lever.

Note: a) items 20 and 21 are only on autotune head "5";

b) items 22, 23, 24, 25, 26 and 27 are only on autotune head "6".

Figure 6-6 shows the following:

1. Two shafts 3 rotating in their own bearings are driven by the electric motor 1 through the common transmission 2. The transmission ratio K_1=2.46.

The electric motor speed is n_1=3,900 r.p.m. at the rated power output of 40 watts.

SECRET
NO FOREIGN DISSEM
Declassified in Part - Sanitized Copy Approved for Release 2013/10/18 : CIA-RDP80T00246A071100330001-5

Declassified in Part - Sanitized Copy Approved for Release 2013/10/18 : CIA-RDP80T00246A071100330001-5
NO FOREIGN DISSEM

50X1-HUM

The two shafts 3 rotate at a speed of n_2=1,580 r.p.m.

2) The two shafts 3 rotate the friction clutches x through the worm gear transmission.

3) The two shafts carry six single thread worms 4 which rotate the friction clutches 7 of the autotune head stop cam ring drums; the transmission ratio of the worm gearing is K_2=60; the speed of the clutch is 19.7 r.p.m.

The operation of the automatic tuning system consists of two cycles. In the first cycle the direction of rotation is counter-clockwise. In the second cycle the direction of rotation is clockwise.

All components of the diagram in figure 6-6 rotate during the entire duration of both cycles of the automatic tuning. Each cycles is limited to one rotation of the friction clutch 7; therefore it is not necessary to determine the speed of the other components in the diagram.

The starting, reversing and stopping of the electric motor is performed by means of the electrical schematic diagram components which will be described later on. All of the work in the electrical circuit, with the exception of the pressing the required communication channel button of the selector push-button station 401 by the radio operator, is performed automatically by the mechanism of the automatic tuning system by means of the "seeking" selector x switch 106 and the limit switches 104 and 105.

The kinematic diagram of the autotune heads. Figure 6-8 gives the kinematic diagram of the autotune head "5". The autotune heads "1", "2", "3", and "4" differ from the autotune head "5" only by having a considerably shorter pawl selector cam drum shaft and do not have a finger on the connecting rod 20 for operating the "seeking" selector switch.

SECRET
NO FOREIGN DISSEM
Declassified in Part - Sanitized Copy Approved for Release 2013/10/18 : CIA-RDP80T00246A071100330001-5

Declassified in Part - Sanitized Copy Approved for Release 2013/10/18 : CIA-RDP80T00246A071100330001-5
NO FOREIGN DISSEM

50X1-HUM

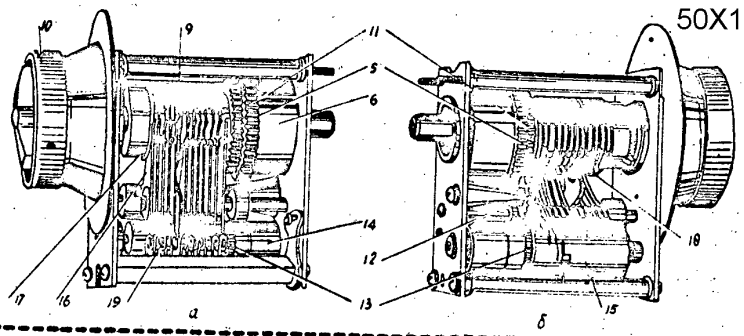

Fig. 6 - 7. Autotune head (a-right view, 1-left-view):
5-worm transmission of the friction clutch; 6-friction clutch; 9-the drum with the set of stop ring cams and flexible washers; 10-the tuning knob; 11-the stop ring gear; 12-the idler gear; 13-the pawl selector cam drum gear; 14-the one-way pawl; 15-the pawl selector cam drum; 16-the selector pawl; 17-the tooth of the selector pawl; 18-the extension of the selector pawl; 19-the selector pawl spring.

From figure 6-8 it is evident that:

1) The transmission inside the autotune head from the friction clutch 6 is performed through:

a) the frictional coupling clutch 6 itself to the autotune shaft with which the following are firmly coupled: the knob 10, the drum 9 with a set of flexible washers, and the tuning element 8. Since the friction drum 7 is directly coupled to the shaft, the transmission ratio is one.

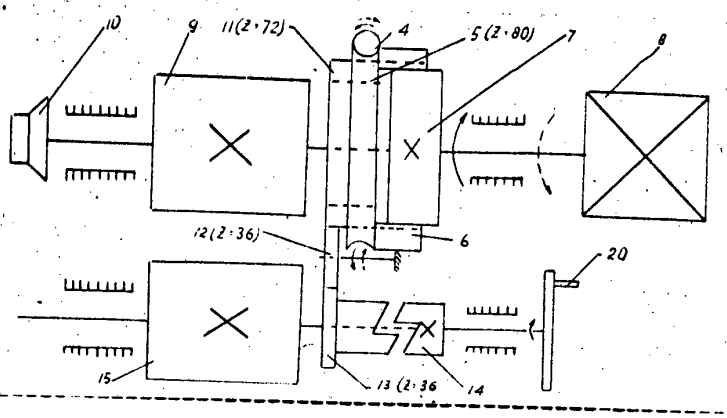

Fig.6-8. Kinematic diagram of the autotune head "_____"
4-single thread worm: 5-worm transmission of the friction clutch; 6-friction clutch; 7-drum of the friction clutch; 8-tuned element; 9-drum with the set of stop cam rings and flexible washers; 10-tuning knob; 11-stop cam ring gear; 12-idler gear; 13-pawl selector cam drum gear; 14-one-way

SECRET
NO FOREIGN DISSEM
Declassified in Part - Sanitized Copy Approved for Release 2013/10/18 : CIA-RDP80T00246A071100330001-5

Declassified in Part - Sanitized Copy Approved for Release 2013/10/18 : CIA-RDP80T00246A071100330001-5
NO FOREIGN DISSEM

14-one-way pawl; 15-pawl selector cam drum; 20-"see selector switch. 50X1-HUM

During the first automatic tuning cycle, the shaft rotates continuously in the direction of the screw, away from the position corresponding to the previously selected channel, up to the limits stop (not more than one revolution), and during the second cycle, the shaft rotates in the direction of the dotted arrow to the secured position corresponding to the selected channel, i.e. not more than one revolution.

When the shaft stops, the friction clutch 6 continues to rotate and slips through on the drum 7.

b) the gear transmission to the one-way pawl 14 which rotates the pawl selector cam drum 15. The transmission is accomplished by means of the gear 11 and 13, whose transmission ratio is K=2. The gear 12 is an idler. Since the gear 11 is permanently coupled with the worm gear 5, it rotates through out the duration of the automatic tu ing. The speed of the drum is 39.5 r.p.m.

2). The one-way drive of the drum 15 comes from gear 13 through the one-way pawl 14. This means that the pawl selector drum rotates throughout the duration of the automatic tuning period, just as in case of the tuning head "6", which enables the successive engagement of all selector pawls.

The kinematic diagram of the autotune head "6". The kinematic diagram of the autotu e head "6" is given by figure 6-6

From the diagram it is obvious that:

1. The transmission inside the autotune head "6" from the friction clutch 6 is performed:

a) through the frictional coupling of the clutch 6 to the autotune shaft with which the following are firmly coupled: the knob 10, the drum 9 with a set of flexible washers and the tuning element 8. In view of the fact that the drum 7 is directly coupled to the shaft, the transmission ratio is one.

Declassified in Part - Sanitized Copy Approved for Release 2013/10/18 : CIA-RDP80T00246A071100330001-5

Declassified in Part - Sanitized Copy Approved for Release 2013/10/18 : CIA-RDP80T00246A071100330001-5
NO FOREIGN DISSEM

50X1-HUM

During the first automatic cycle, the shaft rotates counter-clockwise up to the limit stop, and during the second cycle, the shaft rotates clockwise, until it is stopped by the pawl engaging the detent in the can ring on the drum.

With the shaft stopped, the friction clutch 6 continues to rotate and slips through on the drum 7.

b) through the geat transmission to the lead screw 23 which moves the operating lever 24 of the switches 104 and 105. The transmission consists of a pair of gears 13 and 23 with a transmission ratio of Kal. The gear 22 is permanently coupled with a worm gear 5 and rotates throughout the duration of the automatic tuning period.

2) The worm 4 transmits the rotation to the gear 13 of the pawl selector cam drum. The transmission ratio of the worm and gear is K=40. The gear 13 rotates throughout the duration of the automatic tuning. The speed of the pawl selector cam drum is 36.5 r.p.m.

3) The gear 13 is cpupled throught the one;way pawl 14 to t the shaft of the selector cam drum. The synchronization of all autotune heads is achieved by the adjustment of the one-way pawl on the shafts of all selector cam drums of all of the autotune heads.

The one-way pawl rotates the shaft of the drum only during the first cycle the drum will stop in the position determined by the instant of reversal of the electric motor, which is determined by the instant when the "seeking" selector switch interrupts the supply circuit of the relay -)104 which controls the electric motor M 101.

The "seeking" selector switch is mechanically synchronized with all of the pawl selector cam drums. To each

position of the....

SECRET
NO FOREIGN DISSEM
Declassified in Part - Sanitized Copy Approved for Release 2013/10/18 : CIA-RDP80T00246A071100330001-5

Declassified in Part - Sanitized Copy Approved for Release 2013/10/18 : CIA-RDP80T00246A071100330001-5
NO FOREIGN DISSEM

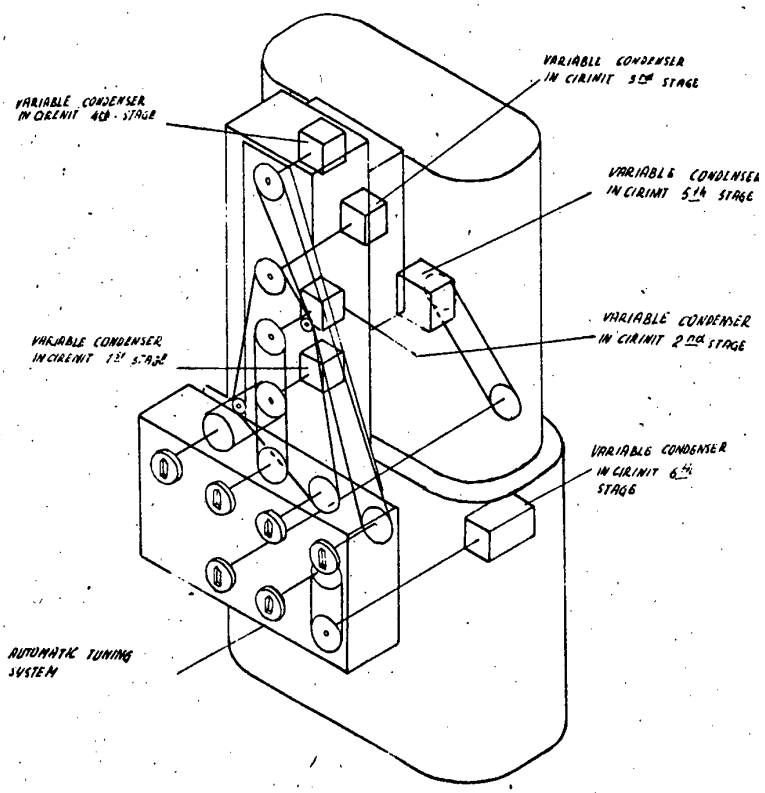
VARIABLE CONDENSER IN CIRCUIT 4th STAGE
VARIABLE CONDENSER IN CIRCUIT 5th STAGE
VARIABLE CONDENSER IN CIRCUIT 1st STAGE
VARIABLE CONDENSER IN CIRCUIT 2nd STAGE
VARIABLE CONDENSER IN CIRCUIT 6th STAGE
AUTOMATIC TUNING SYSTEM

Fig 6 - 9. Kinematic diagram of the autotune coupling to the variable condensers of the transmitter high frequency stages.

position of the "seeking" selector switch corresponds a certain position of the pawl selector cam drum, i.e. the "engagement" of a certain selector pawl which couples its corresponding cam ring on the stop cam ring drum and stops the tuning element shaft in the presecured position.

This way, the agreement of the member of the stop cam ring, which stops the tuned element, will agree with the number of the "seeking selector switch contact which corresponds to the number of the depressed push-button of the communication channel selector switch. This agreement is one of the main features of the function of the system and may be better understood by annalyzing the mechanical .....

Declassified in Part - Sanitized Copy Approved for Release 2013/10/18 : CIA-RDP80T00246A071100330001-5

Declassified in Part - Sanitized Copy Approved for Release 2013/10/18 : CIA-RDP80T00246A071100330001-5
NO FOREIGN DISSEM

50X1-HUM

stood by annalyzing the mechanical details of the automatic tuning system and its electrical schematic diagram.

The kinematic diagram of the coupling of the autotune heads to the variable condensers of the respective transmitter high frequency section stages is given by figure 6-9.

The operations of the transmitter automatic tuning system during the selection of a communication channel takes place in the following way:

The first phase: The selector switch 401 push-button corresponding to the desired communication channel is depressed (see fig. 6-10). Thereby the supply circuit of the automatic tuning relay -) 104 coil is completed over the "seeking" selector switch 106, over the contacts of the selector and the communication channel switching relays -)402-1 and -)402-2 to ground (chassis).

When the first channel push-button is pressed, the relay -)402-1 is energized; when the second channel push-button is pressed, the relay -)402-2 is energized; when the third channel push-button is pressed, both relays are energized (-)402-1 and -)402-2); and, finally, when the fourth push-button is pressed, both relays remain deenergized.

Declassified in Part - Sanitized Copy Approved for Release 2013/10/18 : CIA-RDP80T00246A071100330001-5

Declassified in Part - Sanitized Copy Approved for Release 2013/10/18 : CIA-RDP80T00246A071100330001-5
NO FOREIGN DISSEM

50X1-HUM

FOR. 6-10: Schematic diagram of the transmitter and the main receiver communication channel selector circuits when controlled from the central control unit; ...Y.

SECRET
NO FOREIGN DISSEM
Declassified in Part - Sanitized Copy Approved for Release 2013/10/18 : CIA-RDP80T00246A071100330001-5

Declassified in Part - Sanitized Copy Approved for Release 2013/10/18 : CIA-RDP80T00246A071100330001-5
NO FOREIGN DISSEM

50X1-HUM

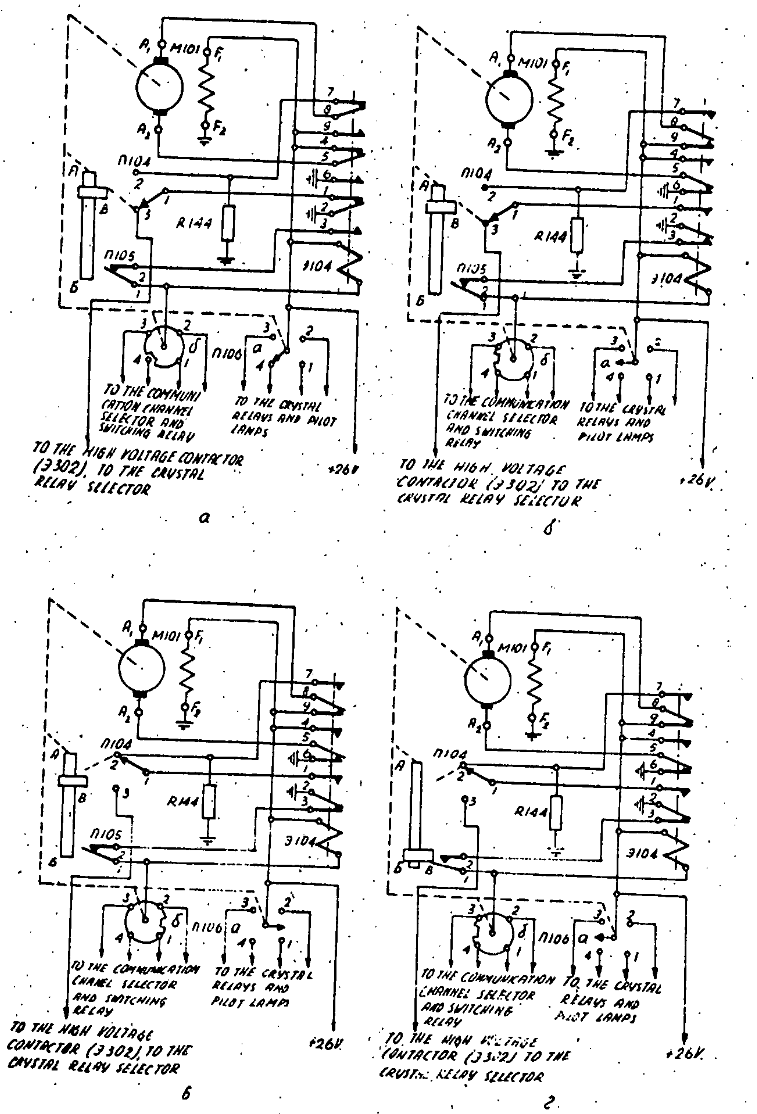

Fig. 6-11. The sequence of automatic transmitter tuning during swit ing FROm the fourth to the third channel (a - position of the automatic tuning after the selection of the fourth communication channel; 6 - the first phase; ...... - the second phase: ..... - the third phase).

SECRET
NO FOREIGN DISSEM
Declassified in Part - Sanitized Copy Approved for Release 2013/10/18 : CIA-RDP80T00246A071100330001-5

Declassified in Part - Sanitized Copy Approved for Release 2013/10/18 : CIA-RDP80T00246A071100330001-5
NO FOREIGN DISSEM

50X1-HUM

Fig. 6-12. The sequence of automatic transmitter tuning during switching from the fourth to the third channel (a - the fourth phase; .... - the fifth phase; the sixth phase; ..... - the position of the automatic tuning device after the selection of the third communication channel.

SECRET
NO FOREIGN DISSEM
Declassified in Part - Sanitized Copy Approved for Release 2013/10/18 : CIA-RDP80T00246A071100330001-5

Declassified in Part - Sanitized Copy Approved for Release 2013/10/18 : CIA-RDP80T00246A071100330001-5
NO FOREIGN DISSEM

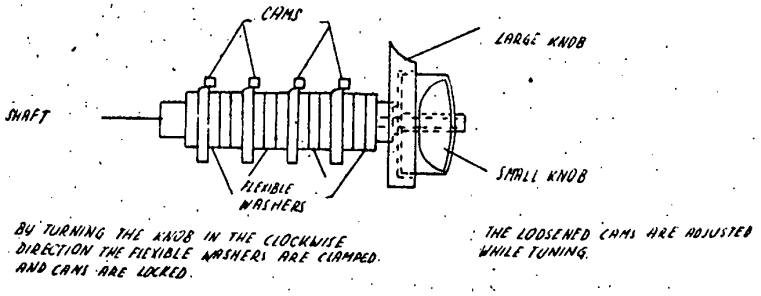
CAMS
LARGE KNOB
SHAFT
SMALL KNOB
FLEXIBLE WASHERS
BY TURNING THE KNOB IN THE CLOCKWISE DIRECTION THE FLEXIBLE WASHERS ARE CLAMPED AND CAMS ARE LOCKED.
THE LOOSENED CAMS ARE ADJUSTED WHILE TUNING.

Fig. 6 - 13. Assembly of the lever mechanism shaft.

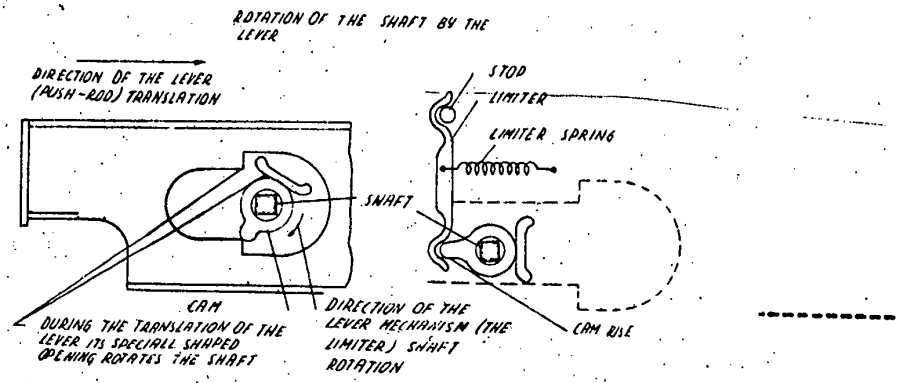
ROTATION OF THE SHAFT BY THE LEVER
DIRECTION OF THE LEVER (PUSH-ROD) TRANSLATION
STOP
LIMITER
LIMITER SPRING
SHAFT
CAM
DIRECTION OF THE LEVER MECHANISM (THE LIMITER) SHAFT ROTATION
CAM RISE
DURING THE TRANSLATION OF THE LEVER ITS SPECIALLY SHAPED OPENING ROTATES THE SHAFT
DURING FURTHER TRANSLATION OF THE LEVER, THE UPPER END OF THE LIMITER LEANS AGAINST THE STOP WHERERS ITS LOWER END LEANS AGAINST THE CAM RISE, WHEREBY IT FIXES THE POSITION OF THE CAM FLEXES AND PRESSES THE LIMITER AGAINST THE STOP AND AGAINST THE CAM RISE

Fig. 6 - 14. Diagram of the cam positioning of the lever (push rod) mechanism while tuning.

SECRET
NO FOREIGN DISSEM
Declassified in Part - Sanitized Copy Approved for Release 2013/10/18 : CIA-RDP80T00246A071100330001-5

Declassified in Part - Sanitized Copy Approved for Release 2013/10/18 : CIA-RDP80T00246A071100330001-5
NO FOREIGN DISSEM

50X1-HUM

By pressing the push-button of the first channel the supply circuit of relay coil -)104 is completed to the chassis over the "seeking" selector switch 106 deck contact, over the relay -)402-2 contacts 9-10 and over the relay +)402-1 contacts 11-10.

When pressing the push-button of the second channel, this circuit is grou ded over the selector switch. 106 deck ... contact ..., over the relay -)402-2 contacts 8-7 and over the relay -)402-1 contacts 9-10.

When pressing the push-button of the third channel, the circuit is completed to the chassis over the selector swirch 106 deck contact 3, over the relay -)402-2 contacts 11-10 and over the relay -)402-1 contacts 11-10.

When selecting the fourth channel the relay coil -)104 is grounded in a similar way over the selector switch 106 deck 6 contact 4, over the contacts 6-7 of the relay -)402-2 and over the relay -) 402-1 contacts 9-10.

With the relay -)104 energized, its contacts 9-8 and 5-6 close the motor circuit and disconnect the - 26../ground/ from the g high voltage contactor from the relay which connects the quartz crystal and from the communication channel pilot lamps.

The electric motor M.101 proceeds to rotatem whereby all the pawl selector cam drums 15, the drums with the set of stop ring cams and flexible washers 9, as well as rhe "seeking" selector seitch 106 are set into counter clockwise motion and actuate the sliding lever of the limit switch mechanism 24.

A second negative circuit of the relay -)104 coil is thus completed over the contacts of the limit transfer switch 105 and over the closed contacts of relay +)104. This circuit is in

parallel with .....

SECRET
NO FOREIGN DISSEM
Declassified in Part - Sanitized Copy Approved for Release 2013/10/18 : CIA-RDP80T00246A071100330001-5

Declassified in Part - Sanitized Copy Approved for Release 2013/10/18 : CIA-RDP80T00246A071100330001-5
NO FOREIGN DISSEM

parallel with the circuit formed by the "seeking" selector switch deck.. contacts. Therefore, when the "seeking" selector switch open a circuit of which its deck contacts form a part, the supply circuit -)104 will not be open circuited.

The second phase. As the sliding lever of the limit switch operating mechanism moves away from the limit switch 104 its contacts 1 and 3 open, where as the contacts 1 and 2 close. Thus a second interruption of the high voltage contactors, of the crystal connecting relay as well as of the communication channel pilot lamp circuit takes place and a circuit which short circuits the resistor R.144 closes. The limit switch mechanism moves all the way to the limit swirch ..105.

The third phase. The operating lever /24/ of the limit switching mechanism reached the limit switch 105. The contacts of the limit switch 103 open, but the relay coil -)104 ..... energized, because its circuit is closed ~~xx~~ by the "seeking" selector switch ..106 deck.. and the electric motor continues running as long as the detent in the selector swirch ..106 shaft is not in just position with the respective channel which the operatir selected by means of the channel selector switch ..401.

The fourth phase. When the detent in the "seeking" selector switch ..106 shaft is in a just a position with the contact of the selected channel, the cam drums, which are synchronized with it, will reach a position where the selector pawls just enter the respective detents ~~in the~~ in the pawl selector drums.

At the same instant the relay -)104 coil circuit is interrupted and the relay is thus deenergized, whereby the resistor R.144 is shortcircuited, the polarity if the motor armature changes and

the motor proceeds...

SECRET
NO FOREIGN DISSEM
Declassified in Part - Sanitized Copy Approved for Release 2013/10/18 : CIA-RDP80T00246A071100330001-5

Declassified in Part - Sanitized Copy Approved for Release 2013/10/18 : CIA-RDP80T00246A071100330001-5
NO FOREIGN DISSEM

the motor proceeds to rotate in the opposite direction.

With the motor rotating in the opposite direction, the drums with the set of stop cam rings and flexible washers 9 will also rotate in the opposite direction and when the detent of the stop cam ring belonging to the selected channel meets the selector pawl, the pawl will enter the detent, This way the tuning element 8 stops in the presselected position, whereas the friction clutch slips through wntil the automatic tuning cycle has been completed.

The operating lever 24 of the mix limit switch mechanism starts moving in the opposite direction.

The "seeking" selector swirch ;;106 does not cahnge its position since it can rotate only in one direction.

The fifth stage. The operating lever 24 if the limit switch mechanism moved away from the limit switch ..105 and thus permitted the contacts of this switch to close. The operating lever now moves toward the limit switch ..104.

The sixth stage. The operating lever 24 of the limit switch mechanism reaches the switch ;.104 and the switch contacts 1 and 2 open, whereas the contacts 1 and 3 close.

The contacts 1 and 2 of the limit switch ..104 disconnect the resistor R 144. This resistor, which is connected in series with the motor armature, at last stops the motor and allows a limited current to flow through the armature. This current is just sufficient to maintain a predetermined turning moment.

The limit switch ..104 contacts 1 and 3 reclose the high voltage circuit and energize the crystal connecting relay as well as the communication channel pilot lamp.

The automatic tuning cycle has thus been completed.

The high voltage .....

SECRET
NO FOREIGN DISSEM
Declassified in Part - Sanitized Copy Approved for Release 2013/10/18 : CIA-RDP80T00246A071100330001-5

Declassified in Part - Sanitized Copy Approved for Release 2013/10/18 : CIA-RDP80T00246A071100330001-5
NO FOREIGN DISSEM

50X1-HUM

The high voltagw and the automatic tuning circuits are interlocked in such a way as to prevent the connecting of the high voltage during the automatic tuning cycle.

All phases of the automatic transmitter tuning may be followed from the ddagrams on fig. 6 - 11 and 6 - 12, which give an example of switching the communication channels from the fourth channel to the third channel.

3. The receiver automatic tuning system.

General. The automatic tuning mechanism of the receiver consists of a lever mechanism/push-rod-cam type. and a crystal selector switch are driven by a stepping relay. The stepping relay and there by the whole tuning mechanism are actuated by pressing one of the communication channel push-buttons on the respecetive control panel.

The automatic tuning of the receiver is achieved by an electric system consisting of the following:

1) The communication channel selector switch on the respective control panel with which the operator selects the desired channel and thereby fixes it.

2) The "_____"/"control unit"% selector switch on the central control unit for controlling the main receiver from either the central control unit _____, or from the remote control unit _____, _____ and vice versa.

3) The selector and communication channel switching relays -)402-1 and -)402-2 which connect the respective contacts of the automatic tuning input supply circuit when one of the communication selector push;buttons is pressed.

4) The stepping relay selector switch consists of four sets of contacts and interrupts the stepping relay coil circuit and

opens one of the .....

SECRET
NO FOREIGN DISSEM
Declassified in Part - Sanitized Copy Approved for Release 2013/10/18 : CIA-RDP80T00246A071100330001-5

Declassified in Part - Sanitized Copy Approved for Release 2013/10/18 : CIA-RDP80T00246A071100330001-5
NO FOREIGN DISSEM

50X1-HUM

opens one of the four contacts sets by means of a ratched wheel.

5) The crystal selector switch ..201 which consists of four decks connected by movable levers/push-rods/ which, after selection of one of the channels, switches the proper crystal to the control grid of the crystal-oscillator-tripler vacuum tube and disconnects the control grid of the vacuum tube from the ground.

6) The stepping relay, which consists of the following parts:

1/ a ratched wheel with came on a common shaft,

2/ a armature with a spring mounted pawl,

3/ an interrupter,

4/ a coil.

The purpose of the stepping-relay is to actuate the lever mechanism of the automatic tuning. The stepping-relay works in a similar way to an electric bell.

The accuracy of the repeated automatic tuning is very great and it is fully dependent on the accuracy of the preliminary manual tuning.

The principle of automatic tuning. A certain position of the knobs of the receiver corresponds to the tuning of the receiver for each frequency. Further, the purpose of the automatic tuning is to turn the knobs and simultaneously the shafts of the tuning elements/the variable condensers/to the precise predetermined positions as well as the tuning elecents by means of flexible couplings connected tothe knobs.

The function of the receiver automatic tuning has been explaihad by Fig. 6 - 10. When one of the receiver communication channels has been selected, the stepping-relay circuit is energized and this relay rotates the ratchet wheel and cams, whereby the position of the tuning mechanism levers change and simultaneously the position...

SECRET
NO FOREIGN DISSEM
Declassified in Part - Sanitized Copy Approved for Release 2013/10/18 : CIA-RDP80T00246A071100330001-5

Declassified in Part - Sanitized Copy Approved for Release 2013/10/18 : CIA-RDP80T00246A071100330001-5
NO FOREIGN DISSEM

neously the position of the tuning elements and the trotor of the crystal switch selector change. When the lever is raised to the stop corresponding to the selected channel, the stepping relay interrupts its function because its x coil circuit has been opened by means of one of the cams which just raised one of the contact sets of the selector switch.

This way the automatic tuning cycle of the receiver stops, since the tuning element just reached the precise position which it occupied during the manuel tuning, whereas the crystal selector switch, connected the proper crystal from ground to the crystal oscillator-tripler vacuum tube control grid circuit.

The design features and the kinematics of the system.

The lever mechanism enables the setting of the tuning condenser shafts to the desired positions within the range of 90°.

The lever machanism consists of four flat levers/push-rods which are placed one next to the other.

Each lever has two special shaped openings through which pass two shafts/see fig.6-13/, which are connected with the tuning knobs of the receiver/"larger knobs"/ and with the tuning condensers.

These shafts have a square cross-section and carry four flexible washers with square openings and four flexible washers with square openings and four cams with round openings.

Thus the cams can rotste freely on the shafts, whereas the washers cannot. The rear knobs/"the larger knobs"/ are assembled on the shafts by their square openings. The front end of the shaft which passes through the larger knob is threaded and the smaller/ fixing/knob is screwed there on. By tuning the small knob clockwise, the larger knob, the washers and the cams are locked together

and the cams thus .....

Declassified in Part - Sanitized Copy Approved for Release 2013/10/18 : CIA-RDP80T00246A071100330001-5

Declassified in Part - Sanitized Copy Approved for Release 2013/10/18 : CIA-RDP80T00246A071100330001-5
NO FOREIGN DISSEM

50X1-HUM

together and the cams thus ~~xxxx~~ lose their freedom to rotate on the shaft and they are firmly fixed to it. This way the cams are locked.

To the left of the openings, through which the shafts with their cams pass, are, on each lever two claws against which a double arm lever leans, which we shall call the limiter/see fig. 6-14/. The ends of this limiter are bent into hooks which are turned to the right, i.e. toward the cams of the partivular shaft.

A spring is attached between the claws in the centre of the limiter, which leans against the claws and the other ~~xx~~ end of this spring is attached to the lever.

When the push-button of the desired channel is pressed and the stepping relay/see fig. 6-15/ is actuated, one of its cams moves the respective lever to the right so long, until one end of the limiter of this lever engages with one of its ends the cam rise and the other end of the limiter leans against the mechanism stop.

In order for the cam rise to face the limiter in the instant when the limiter moves toward the x cam, the lever has an opening of a special shape/see fig.6-14/. When the levermoves to the right, one of the slots of the opening engages the cam in such a way as to rotate the cam rise to the left and have it face the limiter.

By this means the opening in the lever enables and advance setting of the cam, where as the limiter insures the precision setting.

At the same time the other cam of the stepping relay is turned away from the first one by 90° and presses against the

upper spring .....

SECRET
NO FOREIGN DISSEM
Declassified in Part - Sanitized Copy Approved for Release 2013/10/18 : CIA-RDP80T00246A071100330001-5

Declassified in Part - Sanitized Copy Approved for Release 2013/10/18 : CIA-RDP80T00246A071100330001-5
NO FOREIGN DISSEM

50X1-HUM

upper spring of the particular selected communication channel set of contacts and thereby interrupts the supply circuit of the stepping relay. This way the cycle of the entire mechanism is stopped.

In order to perform the preliminary manual tuning, it is necessary to unlock the tuning knob by turning the small knobs counter clockwise. The lexible washers on the shafts loosen the cams which can then again rotate freely, independently of the shaft.

By turning the tuning knob, the shaft with the flexible washer will turn together with the tuning condensers, whereas the cam, to which the end of the limiter is pressed cannot move. After the tuning has been completed the tuning position is locked by means of the small knobs. In this way the shaft is adjusted in the precise position with respect to the cam belonging to the selected channel and this position is maintained irrespective of the tuning of the other communication channels.

When selecting the next channel the respective cam of the previous tuning loosens the lever of the previously tuned channel and the lever is returned to its neutral position by a spring.

The electric system of the automatic tuning device. The receiver automatic communication channel selector works in the following manner.

The selector switch T1 401 push-button of the appropriate communication channel is depressed/see fig.6-10/. The stepping relay T1M-201 is energized by connecting its coil to ground over its normally closed contacts, over the appropriate selector-switch contact set of the stepping relay, over the apropriate contact of the connector ø 203, the apropriate contacts of the receiver

terminal board .....

SECRET
NO FOREIGN DISSEM
Declassified in Part - Sanitized Copy Approved for Release 2013/10/18 : CIA-RDP80T00246A071100330001-5

Declassified in Part - Sanitized Copy Approved for Release 2013/10/18 : CIA-RDP80T00246A071100330001-5
NO FOREIGN DISSEM

receiver terminal board 1..701-5, the contact 32 of the transmitter terminal board ..901, the contact 32 of central control panel terminal board,..405, the agropriate contacts of relay ..402-1, the contacts of relay -)401-1/when selecting the 1st.of the 4th.commu+ nication channel/and the apropriate contacts of relay -)402-2.

The armature of the stepping relay closes, whereby its interrupter contact opens and disconnect its coil, The armature returns to its former positions and the stepping relay interrupter contacts again reclose and energize its coil so that the armature again recloses and the stepping relay contacts once mofe open and the armature simultaneously moves away. This procedure repeats until the apropriate cam of the stepping relay opens the appropriate contact set of the stepping relay selector switch.

The cams "1","2","3", and "4" are actuated by means of a ratchet. The ratchet wheel is brought into motion by the pawl of the stepping relay armature.

During the selection of the <u>first channel</u> the supply circuit of the stepping relay is connected to ground over the contact set "1" of the selector switch, the contacts 8-7 of relay -)402-1, the contacts 1-2 of relay -)401-1 and the contacts 3-4 of relay -)402-2.

During the selection of the <u>second channel</u> the circuit closes over the contact set "3" of the selector switch, the contacts 5-4 of relay -)402-1 and contacts 5-4 of relay -)402-2.

Finally, during the selection of the <u>fourth channel</u> the stepping relay coil circuit is energized by connecting the coil to ground over the contact set "4" of the selector switch, over the

<u>contacts 6-7</u> .....

SECRET
NO FOREIGN DISSEM
Declassified in Part - Sanitized Copy Approved for Release 2013/10/18 : CIA-RDP80T00246A071100330001-5

Declassified in Part - Sanitized Copy Approved for Release 2013/10/18 : CIA-RDP80T00246A071100330001-5
NO FOREIGN DISSEM

contacts 6-7 of relay -)402-1, over the contacts 1-2 of relay -)401-1 ans over the contacts 3-4 of the relay -)402-2.

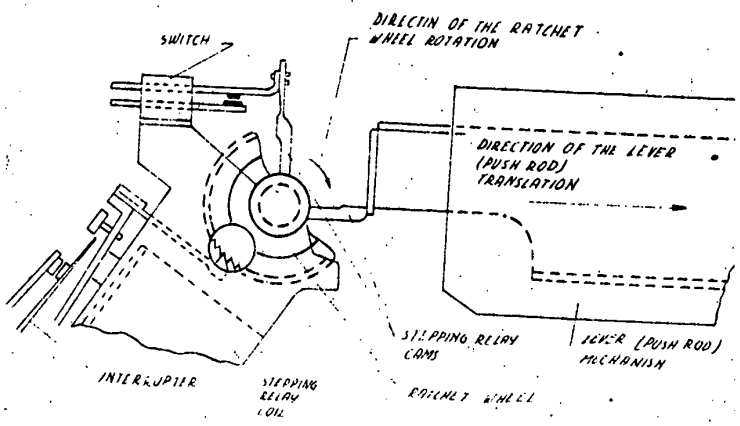

Fig. 6-15. Coupling of the stepping relay with the lever mechanism.

From this it is obvious that the opening of any set of contacts of the stepping relay selector switch/depending on the selected channel,stops the operation of the stepping relay and thus also stops the automatic tuning cycle of the particular communication channel.

The " "/"release"/push-button. The " "/"Release"/ push-button K/201 is located in the upper left corner of the front panel of the receiver. This push-button serves the purpose of locking the tuning mechanism by means of the small buttons after completing the manual tuning, but without disturbing the tuning. By pressing the "Release" push-button the end of the stepping relay coil is momentarily grounded. The coil passes a current impulse and the relay armature closes for an instant and rotates the ratchet and cams by one tooth.

Simultaneously.....

Declassified in Part - Sanitized Copy Approved for Release 2013/10/18 : CIA-RDP80T00246A071100330001-5

Declassified in Part - Sanitized Copy Approved for Release 2013/10/18 : CIA-RDP80T00246A071100330001-5
NO FOREIGN DISSEM

Simultaneously the cam of the apropriate tuned channel releases the lever which is forced by a spring to move to the extreme left position. The shafts with the cams, washers and knobs of the tuning system are released and may be easily locked by turning the small knobs clockwise. The stepping relay selector switch contact set, which belongs to the tuned channel, remains disconnected since the turning of the ratchet wheel by 1 tooth is not sufficient for its release.

The next time the "release"push button is pressed, the stopping relay coil passes another current impulse and the ratchet rotates by another tooth and only then does the appropriate contact set of the selector switch release and the contacts close.

A new automatic tuning cycle starts, and after its completion the preselected channel is again tuned.

4. The selection and switching of the transmitter and main receiver communication chahnels.

This operation is performed from the central control panel by means of the four-push-button selector switch ..401.
Above the push-buttons is the inscription "_____"
/"Commu ication channel selector"/ and "1","2","3" and "4".

When selecting the necessary communication channel the appropriate push-button of the selector /.401 is pressed/the previously depressed push button automatically jumps out./

The push-buttons control the energizing of two relays, namely -)402-1 and -)402-2/see fig.6-10/.

The relays control the selection of the communication channel of the transmitter and of the main receiver by means of the automatic appatatus.

The motor driven .....

NO FOREIGN DISSEM
Declassified in Part - Sanitized Copy Approved for Release 2013/10/18 : CIA-RDP80T00246A071100330001-5

Declassified in Part - Sanitized Copy Approved for Release 2013/10/18 : CIA-RDP80T00246A071100330001-5
NO FOREIGN DISSEM

50X1-HUM

The motor driven transmitter channel tuning and the receiver stepping-relay supply circuits are energized over the relay contacts and over the contacts sets of the selector switch and of these devices.

The selector and communication channel switching relays -) -)402-1 and -)402-2 are supplied from the separate control line 180Vd.

c.rectifier source, which is located in the lower part of the transmitter rack.

The transmitter channel tuning electric motor and the receiver tuning stepping relay are supplied from the 26 V. d.c. power source the motor power supply comes from a 26 V rectifier which is a part of the BC - 2 rectifier, or from a 26V storage battery.

In case that 220 V a.c. is not available for the radio communication unit/and therefore 180 V. are not available from the control line rectifier., it is possible to switch the communication channels of the main receiver by means of KM-60L four push-button selector switch of the metering apparatus, which is connected to this receiver.

In such an instance.see fig.6-10/the contacts of relay -)401-1 remain open and the chassis/minus/is disconnected from the main receiver fourth communication channel circuit, which enables to switch the channels of this receiver by means of the KM.601 channel selector switchm located on the metering panel.

B. Remote control of the radio communication unit.

6-5 General.

The remote control of the radio communication u it is performed by cables from the remote control apparatus /B.....Y/.

The remote control....

SECRET
NO FOREIGN DISSEM
Declassified in Part - Sanitized Copy Approved for Release 2013/10/18 : CIA-RDP80T00246A071100330001-5

Declassified in Part - Sanitized Copy Approved for Release 2013/10/18 : CIA-RDP80T00246A071100330001-5
NO FOREIGN DISSEM

The remote control apparatus may be located up to 10 kms, away from the radio-van the interconnection is made by means of a field telephone cable .....-7x2/of .....-7/.

The control apparatus must be connected by four conductors. Each radio communication unit has 2000 meters of the N T Ø -7x2 cable/or 4000 meters of the N T Ø-7 cable/, i.e. the actual connecting distance of this cable be only 1 km.

The connecting conductors are coded and the numbers 7,8,9 and 10 are used for connecting the portable control unit /B..Y/.

The portable control unit consists of the following parts:

1) The B..Y panel.
2) The BC..-2 rectifier, three storage batteries 4-HKH-45 a.
3) A field telephone set TAM-43.
4) An audio frequency oscillator 3 ..-10..
5) A tent made of asphalt treated tent cloth and tent equipment consisting of a folding table and folding chairs.
6) Further parts and auxilliaryes.

In some instances/such as during storms, induced currents from high voltage transmission lines, direct contact witch such lines, etc./high voltages, which are dangerous both to the radio communication unit apparatus and the attending personnel, may appear in the connecting line between the B..Y remote control apparatus and the radio/van.

In order to prevent such dangerous conditions, the interconnecting conductors are connected to the sets through the type ..K 0,25 amps. fused and they are further protected by gasseous discharge tubes of the PA-350 type.

When a high enough voltage appears on the conductors which cause a break-down...

SECRET
NO FOREIGN DISSEM
Declassified in Part - Sanitized Copy Approved for Release 2013/10/18 : CIA-RDP80T00246A071100330001-5

Declassified in Part - Sanitized Copy Approved for Release 2013/10/18 : CIA-RDP80T00246A071100330001-5
NO FOREIGN DISSEM

cause a break-down between the electrodes.the discharge tube "fires"/, the discharge tube resistance suddenly drops and passes a current, so that the voltage drops to a few tenth of volts. In case of a greater over voltage in the connecting line, the discharge tubes are protected by air spark-gap protectors.

The type. ...K fuses burn out and the circuit is opened as soon as the current exceeds 0,25 amp.

The firing voltages of the PA-350 discharge device is 350 to 400 V and the current rating is 5 amps.

The type ..K fuses and the gassons discharge devices serve to safeguard the interconnecting x cables and are placed in a separate line panel in the radio/van.

In the remote control unit ...Y these device are located on panels near the input of the apparatus.

The radio communication unit apparatus must be properly earthed.

The block diagram of the radio communication unit/see fig. 1-2/shows that the connecting conductors between the radio-van and t the remote control unit B..Y are connected to the central control unit .....Y in the radio van over the input panel in the cable box xxxx section and over the connecting line panel. The conductors are directly connected to the terminals of the remote control panel.

6-6 The connecting line panel.

1. The schematic diagram.

The schematic diagram of the connecting line panel is given by fig.6-16.

The diagram is self-evident and requires only the following explanation.

The toggle switches.....

NO FOREIGN DISSEM
Declassified in Part - Sanitized Copy Approved for Release 2013/10/18 : CIA-RDP80T00246A071100330001-5

Declassified in Part - Sanitized Copy Approved for Release 2013/10/18 : CIA-RDP80T00246A071100330001-5
NO FOREIGN DISSEM

50X1-HUM

The toggle switches ..802-1/"....."/1st.pair"/..802-2 /"2....."/-(2nd. pair"Ø/, ..802-3/"....."-("1st.pair")and ..802-4/"2....." - "2nd.pair"/ are located in the appropriate circuits/by pairs/of the 1st.,2nd,3rd,4th,7th,8th, 9th, and 10th conductors of the interconnecting lines.

The purpose of the toggle switches is to switch the conductors, when these have been incorrectly connected to the terminals of the input panel in the cable box section. It is therefore not necessary to know the proper numbers of the conductors leading to the remote control unit, but it is sufficient to surely properly connect the conductor pairs; The first conductor pair from the remote control unit B...Y must be connected to terminals "7" and "B", the next pair to terminals "9" and "10". Should the 7th. conductor be interchanged with the 8th. or the 9th.with the 10th. it is sufficient to flip the toggle switch marked/"..... (1st.pair"/or "Ø2....."/2nd.pair/ on the re ote control unit B...Y and the conductors will be properly connected to the central control unit .....Y.

2. Design features.

The connecting line cabinet /fig.6-17/consists of an aluminium cabinet with an easy by removable cover. The cover is fastened to the cabinet by two spring leaded locks.

6-7. The remote control unit/panel B...Y/.

1./General.

The remote control apparatus forms an independent unit and it consists of the following parts:

1./ Equipment for controlling the basic circuits of the remote radio communication unit including jacks for connecting the microphone and headphones, jacks for connecting the throat-microphone/

/over a cord switch....

SECRET
NO FOREIGN DISSEM
Declassified in Part - Sanitized Copy Approved for Release 2013/10/18 : CIA-RDP80T00246A071100330001-5

Declassified in Part - Sanitized Copy Approved for Release 2013/10/18 : CIA-RDP80T00246A071100330001-5

Fig. 6-17. Connecting line cabinet (general view).

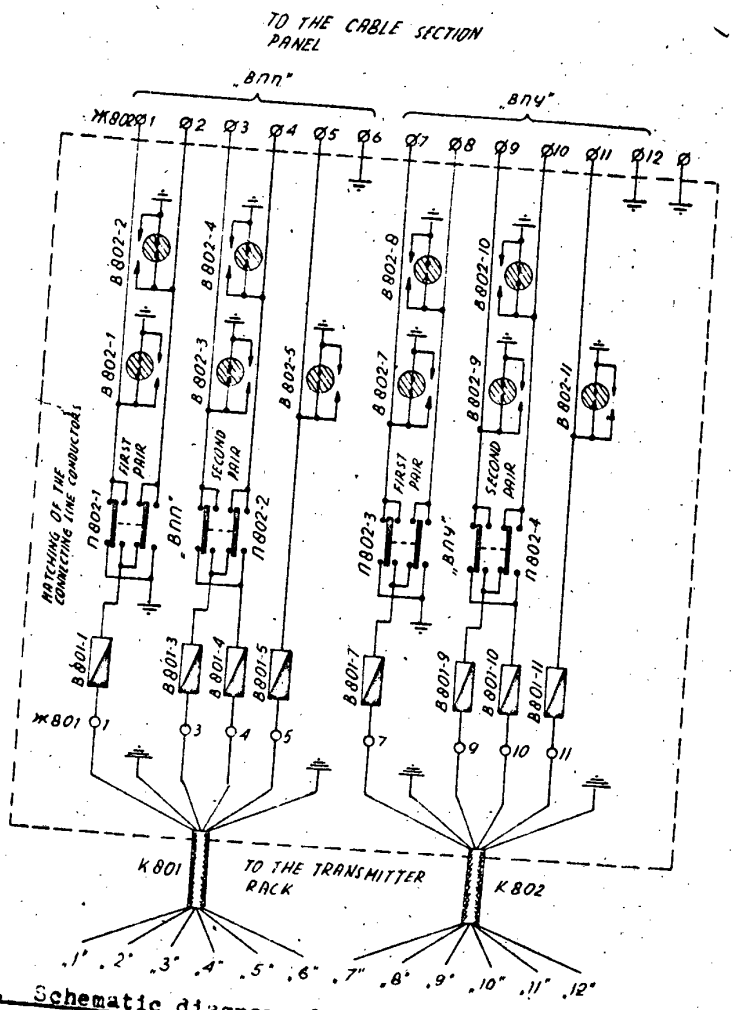

Fig. 6-16. Schematic diagram of the connecting line panel.

SECRET
NO FOREIGN DISSEM

Declassified in Part - Sanitized Copy Approved for Release 2013/10/18 : CIA-RDP80T00246A071100330001-5

Declassified in Part - Sanitized Copy Approved for Release 2013/10/18 : CIA-RDP80T00246A071100330001-5
NO FOREIGN DISSEM

50X1-HUM

phone/ over a cord switch/ a two and a three contact connecter for the connection of the hand microphone of the field telephone set TA..-43 and its microphone switch.

2./ Two radio frequency amplifier: the microphone amplifier and the dynamic loudspeaker amplifier.

3./ Electric measuring instruments for metering the audio frequency voltages, which enter the connecting cables after amplifiction in the microphone amplifier, apparatus and equipment for controlling first of all the voltage values of the amplifier vacuum tubes anodes and second of all the microphone circuit supply source.

4./ Controlling devices in the audio frequency circuits of the amplifier.

5./ A pilot lamp which indicates the operating conditions of the transmitter and a lamp for illuminating the front panel of the remote control apparatus.

6./ Protective devices against lightning/fuses of the ..K type and gasseous discharge tubes of the PA-350 type/.

7./ A vibrator converter for high voltage d.e. generation from a low voltage d.e. source,

8./ Circuit elements for controlling and supplying the service communication telephone/chokes, condensers, resistors, terminal strips etc./

2. The schematic diagram.

The remote control apparatus BTK control devices will be described further during the detailed description of the individual functions of the remote control which are performed by the apparatus.

The pilot lamp ..602 marked "_____"/"transmitter operation indication"/ / see the schematic diagram of the remote control apparatus....

SECRET
NO FOREIGN DISSEM
Declassified in Part - Sanitized Copy Approved for Release 2013/10/18 : CIA-RDP80T00246A071100330001-5

Declassified in Part - Sanitized Copy Approved for Release 2013/10/18 : CIA-RDP80T00246A071100330001-5
NO FOREIGN DISSEM

50X1-HUM

control apparatus in the appendix.indicates the operating readiness of the radio communication unit transmitter. The circuit of this pilot lamp was described previously/see chapter 2, paragraph 2-2, section ~~xxx~~ 5/. The pilot lamp ..602-1 is used for illuminating the front panel and is turned on by turning its rotable cover when the illumination of the panel is unsufficient,

The incoming cables are connected to terminals "7", "8", "9", and "10" on panel ...601. If duplex communication is used with the remote control unit B..Y, two complementary conductors are used and they are fastened to terminal posts "11" ~~and~~ and "12", The 7th. terminal marked "....."/"earthe"/ is used for connecting the grounding conductor to the panel.

The telephone set TA..-43 is connected to the circuit switching jacks 607-1. The condenser C 603 separates the circuit of the service telephone.

The microphone amplifier. The remote control unit microphone amplifier is used for amplification of audio frequency voltages obtained from the carbon microphone, the throat microphone or the microphone of the field telephone set TA..-43. The signal is transmitted from the remote control unit B..Y to the transmitter modulator.

The MPY-56 microphone is connected by a plug to the jack ..604 marked with the letter "M"/see the schematic diagram of the remote control unit/. The push-button on the microphone handle enables either reception or transmission when using semi-duplex communication see the radio control unit circuit schematic diagram/.

The ..A-5 throat microphone/either separate ir helmet mounted/ is connected over a cord switch to the connecter ..603 markee "_____"/"helmet phone"/. Transition from reception to transmission during.....

SECRET
NO FOREIGN DISSEM
Declassified in Part - Sanitized Copy Approved for Release 2013/10/18 : CIA-RDP80T00246A071100330001-5

Declassified in Part - Sanitized Copy Approved for Release 2013/10/18 : CIA-RDP80T00246A071100330001-5
NO FOREIGN DISSEM

50X1-HUM

mission during semi-duplex communication is performed by the carb switch push-button.

The hand microphone of the field telephone at TA..-43 for modulation of the transmitter is connected to the 3 - contact receptable 806 marked "_____"/"microphone"/. Transition from repeption to broadcasting during semi-duplex communication is accomplished by the hand set lever switch/ placed on the microphone hand piece/which is connected to the double jack terminal 607.

The microphone circuit is supplied wit a voltage of approx 6 volts.

The panel supply voltage leads from contact 9 of connector 601 over contacts of deck "...." of the supply selector switch /..603/, over the T/2.... pass filter network L 601 and C 602, over the primary of the input transformer T 601-1 to the microphone jack 604, to the throat microphone connecter 603/over the microphone cord switch/, and also to the 3-contact receptable 606 for connecting the hand microphone of the telephone set TA..-43.

The microphone amplifier/fig.6-18/consists of a transformer input push-pull circuit using a twin-triode type 6 HBC vacuum tube and actually is a single stage audio frequency low amplifier.

The low frequency voltage gained from the carbon microphone, the throat microphone or the hand microphone of the field telephone set TA..-43 is applied to the potentiometer R 601-1 and from there further to the primary winding of the input transformer T 601-1.

An amplified audio-frequency signal is obtained on the secondary of the output transformer T 602-1.

The output signal.....

Declassified in Part - Sanitized Copy Approved for Release 2013/10/18 : CIA-RDP80T00246A071100330001-5

Declassified in Part - Sanitized Copy Approved for Release 2013/10/18 : CIA-RDP80T00246A071100330001-5
NO FOREIGN DISSEM

The output signal derived from the secondary output transformer winding $H_5 - K_3$ is applied to the terminals 9 and 10 over relay -)601 contacts 5-6/which are closed when transmitting/and over the blocking condenser C 605. The conductors connecting the remote control unit B..Y to the transmitter are connected to terminals 9 and 10. A cuprox voltmeter/with a scale 0 to 10 Volts/for metering the audio frequency voltage, which is conducted to the modulator of the transmitter, is also connected across the winding $H_3 - K_3$. The value of the amplified audio frequency signal is adjusted by means of the amplifier input potentiometer R 601-1. The voltmeter consists of the type BK - 20 - 2 bridge connected in the circuit of the milliameter ..602 whose scale is graduated in volts.

The output power if the amplifier when working into a 600 Ohm load is 75 to 100 milliwatts. The output is regulated by the volume control potentiometer R 601-1.

The amplifier requires the following supply voltages; a 6,37 vacuum tube filament supply and 220 V./ direct current anode supply voltage, as well as approximately 6 Volts d.c. supply for the microphone circuit.

The dynamic loudspeaker amplifier. The dynamic loudspeaker amplifier in the remote control unit B..Y is used for amplifying the audio frequency signal-conducted.From the main receiver and transmitted by the cable to the input of the remote control unit B..Y, The voltage is amplified to such a value as to be able to drive the loudspeaker,

The schematic diagram and the components of the amplifier/ see fig.6-19/are almost identical with the power amplifier

driving the dynamic....

50X1-HUM

Declassified in Part - Sanitized Copy Approved for Release 2013/10/18 : CIA-RDP80T00246A071100330001-5

Declassified in Part - Sanitized Copy Approved for Release 2013/10/18 : CIA-RDP80T00246A071100330001-5
NO FOREIGN DISSEM

50X1-HUM

driving the dynamic loudspeaker of the main receiver. The difference lies in the fact that the goven diagram there are no resistors which shunt the secondary winding of the input transformer T 601, whereas a separate set of headphone plugged into jack ...605/"T"/, or a set of helmet phones connected to connectors ...605, or a hand set phone attached to the 3-contact receptable ..606 may be connected to the secondary winding H_3 K_3 of the output transformer ..602.

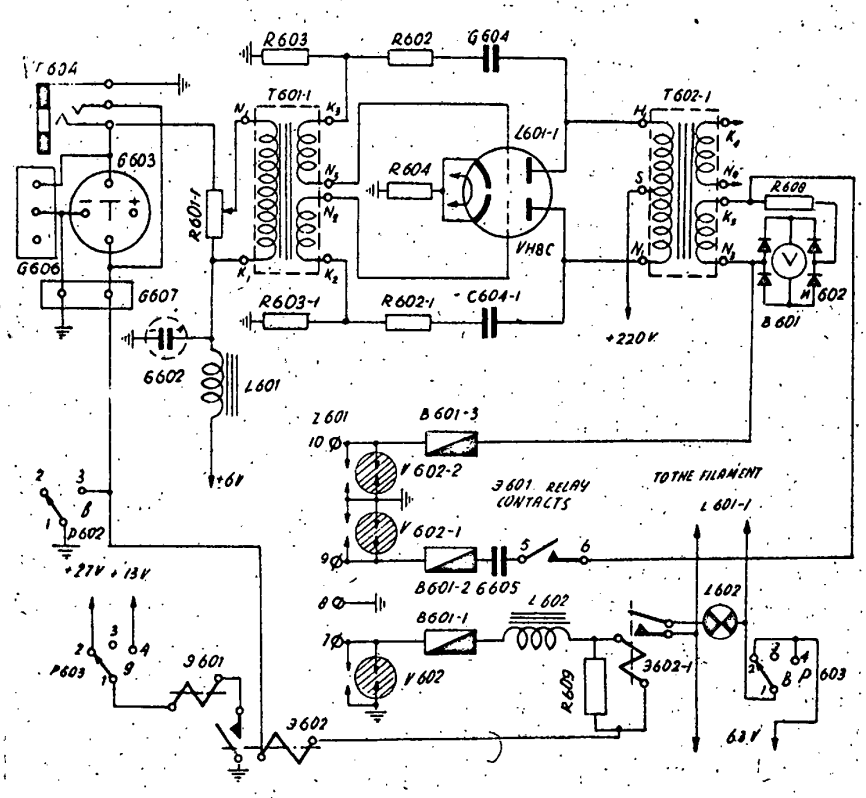

Fig. 6-18. Schematic diagram of the microphone amplifier in the remote control unit B...Y.

Declassified in Part - Sanitized Copy Approved for Release 2013/10/18 : CIA-RDP80T00246A071100330001-5

Declassified in Part - Sanitized Copy Approved for Release 2013/10/18 : CIA-RDP80T00246A071100330001-5
NO FOREIGN DISSEM

50X1-HUM

The main receiver signal is conducted by the 9th. and 10th.conductors to terminals "9" and "10"/on terminal board ..601/. The signal is led from terminal "9" over the fuse B.601-2, over the blocking condenser C 605, over the normally closed contacts 5-4 of relay -)601, contacts 1-2 of deck "a" of the mode of the communication seleçtor switch /...602/ and over the contacts of the toggle switch ///604-2 to the potentiometer R.601 on the input of the dynamic loudspeaker amplifier. The circuit continues further over ~~thexfuxnx~~ contacts 1-2 of deck "....." of the selector switch ..602 and over the fuse B.601-3 to terminal "10" and to the conductor of the same number.

The potentiometer R.601 serves as a volume control for the dynamic loudspeaker or the phones when the amplifier is operating.

As x is obvious from the diagram, the toggle switch //..604-2 is used for connec ing and disconnecting the amplifier to the dynamic speaker. Depending on the position of this toggle switch, the signal voltage may be aplied either to the input of the amplifier or directly to the second secondary winding H_3 K_3 of the output transformer T.602.When the receiver signal voltage is sufficiently strong to safely drive the dynamic loudspeaker directly, the amplifier may be turned off by switching off the filament supply voltage of its vacuum tube.

Power supply for the remote control unit B...Y. The power supply for the remote control unit B..Y may be either from a 110 or 220 V alternating current power line or from a direct current 13-15 V source.

If an a.c. source is available at the location of the remote control unit B...Y, a type BC...-2 rectifier, which is able to supply all the needed voltages, is brought from the radio-van to

the remote control.....

SECRET
NO FOREIGN DISSEM
Declassified in Part - Sanitized Copy Approved for Release 2013/10/18 : CIA-RDP80T00246A071100330001-5

Declassified in Part - Sanitized Copy Approved for Release 2013/10/18 : CIA-RDP80T00246A071100330001-5
NO FOREIGN DISSEM

50X1-HUM

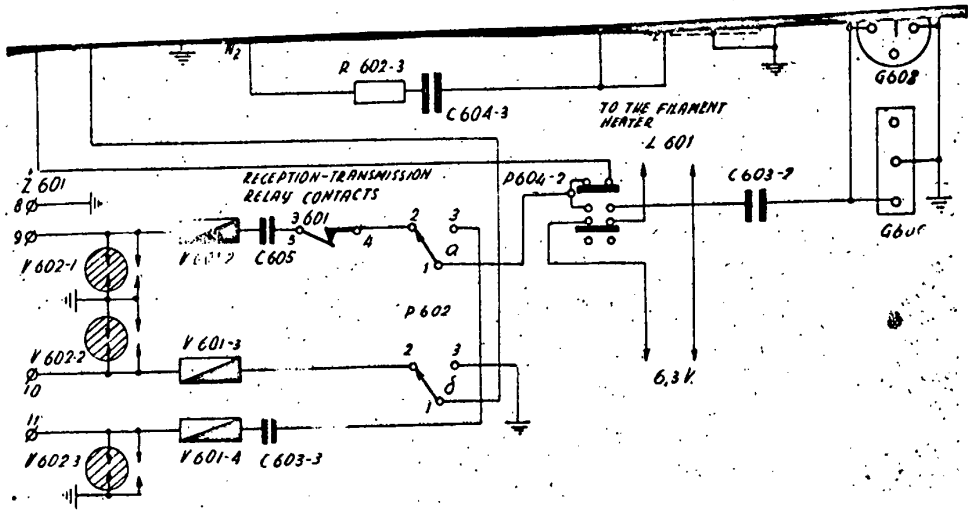

Fig.6-10. Schematic diagram of the dynamic loudspeaker in the remote control unit B...Y.

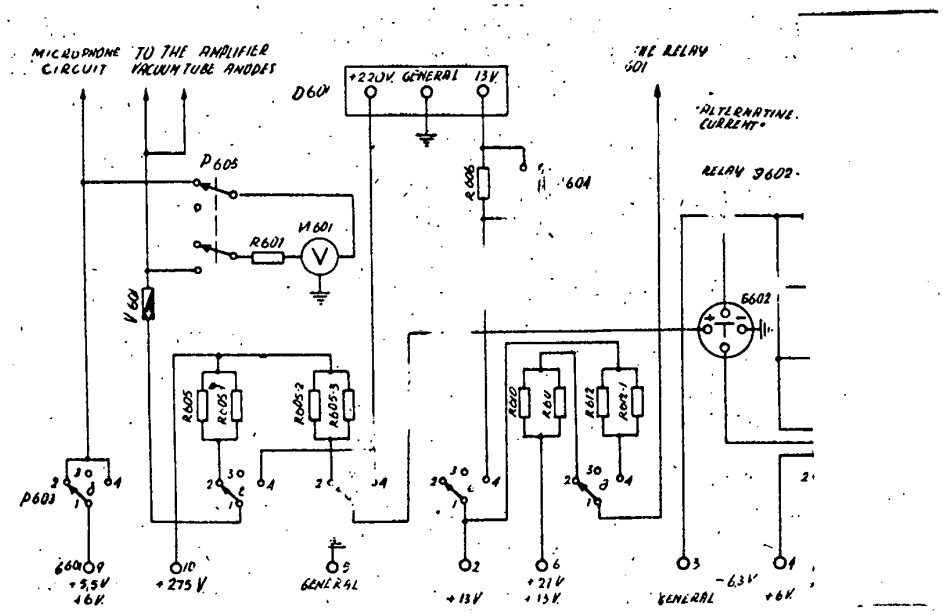

Fig. 6-20. Power supply schematic diagram for the vacuum tubes, the reception-transmission relay, the microphone circuits the pilot lamps and illuminating lamps. In the remote control unit B...Y and for the audio oscillator ...10-6.

SECRET
NO FOREIGN DISSEM
Declassified in Part - Sanitized Copy Approved for Release 2013/10/18 : CIA-RDP80T00246A071100330001-5

Declassified in Part - Sanitized Copy Approved for Release 2013/10/18 : CIA-RDP80T00246A071100330001-5

50X1-HUM

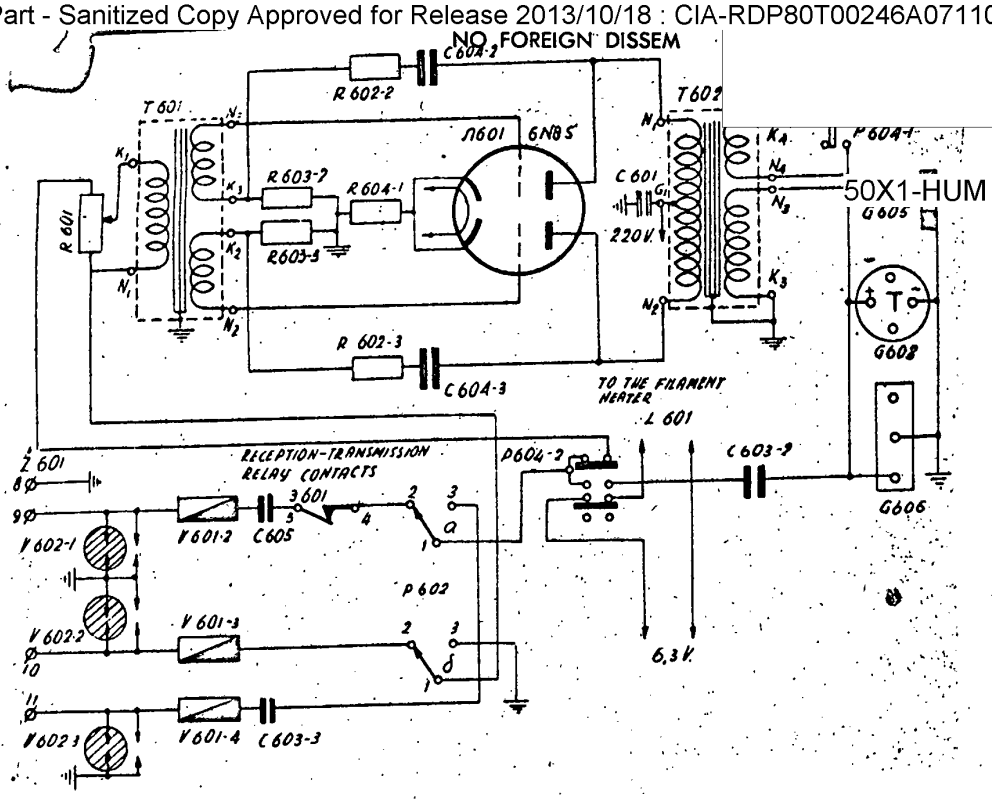

Fig.6-10. Schematic diagram of the dynamic loudspeaker in the remote control unit B...Y.

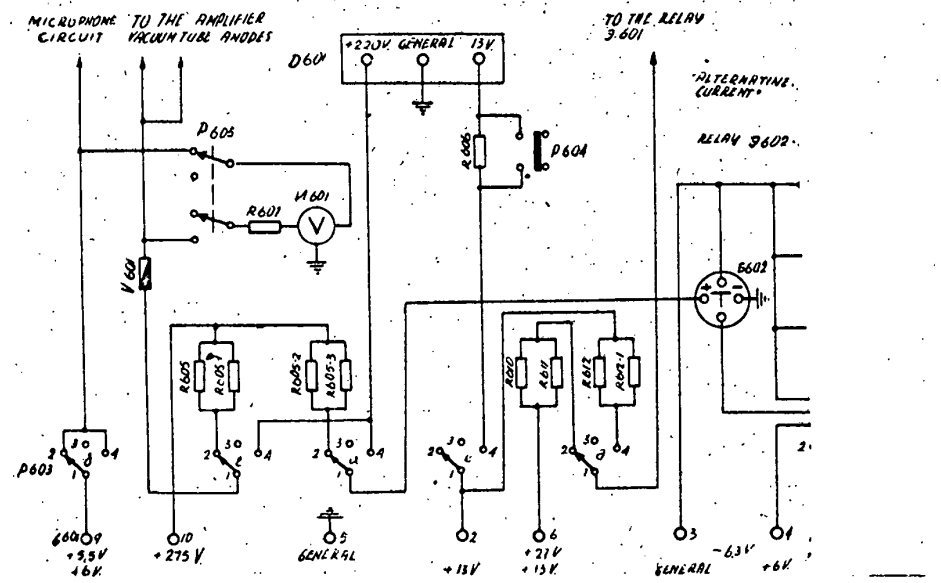

Fig. 6-20. Power supply schematic diagram for the 8 vacuum tubes, the reception-transmission relay, the microphone circuits the pilot lamps and illuminating lamps. In the remote control unit B...Y and for the audio oscillator ...10-6.

Declassified in Part - Sanitized Copy Approved for Release 2013/10/18 : CIA-RDP80T00246A071100330001-5

Declassified in Part - Sanitized Copy Approved for Release 2013/10/18 : CIA-RDP80T00246A071100330001-5
NO FOREIGN DISSEM

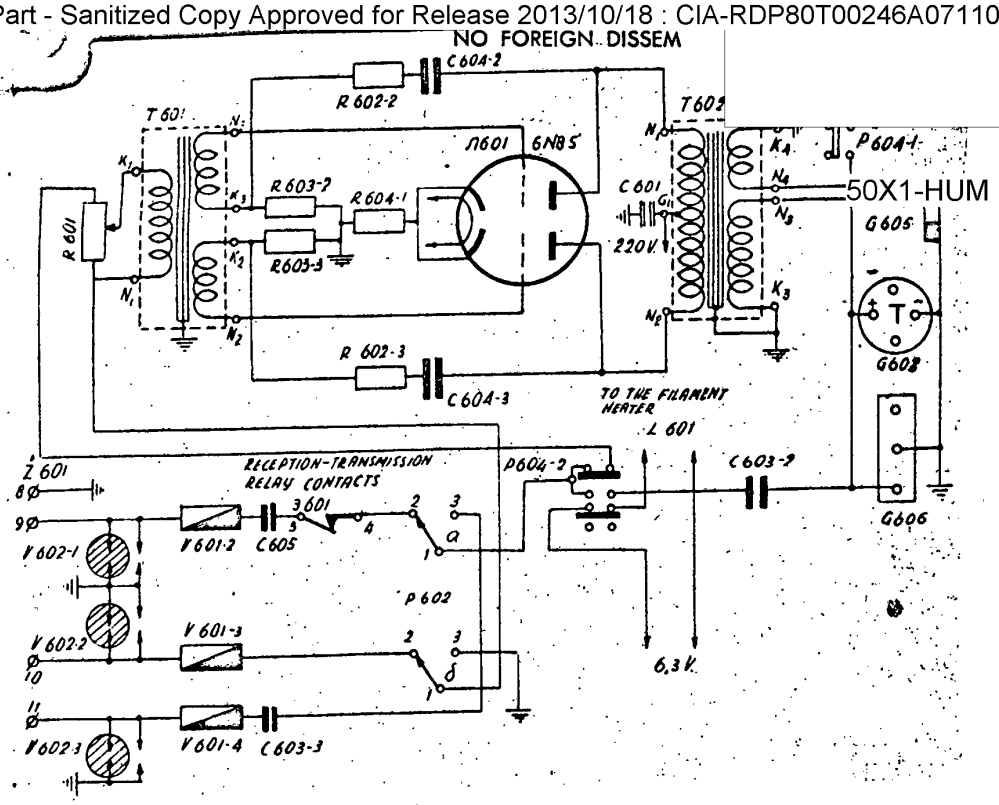

Fig.6-10. Schematic diagram of the dynamic loudspeaker in the remote control unit B...Y.

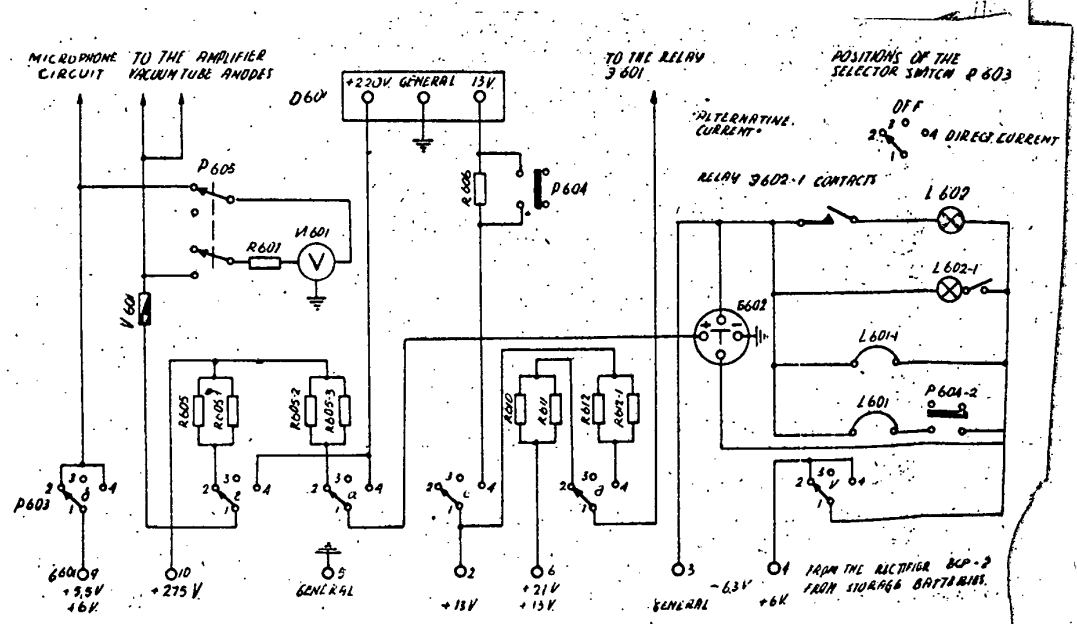

Fig. 6-20. Power supply schematic diagram for the 8 vacuum tubes, the reception-transmission relay, the microphone circuits the pilot lamps and illuminating lamps, in the remote control unit B...Y and for the audio oscillator ...10-6.

SECRET
NO FOREIGN DISSEM
Declassified in Part - Sanitized Copy Approved for Release 2013/10/18 : CIA-RDP80T00246A071100330001-5

Declassified in Part - Sanitized Copy Approved for Release 2013/10/18 : CIA-RDP80T00246A071100330001-5
NO FOREIGN DISSEM

50X1-HUM

the remote control unit B....Y.

If there is no a.c. source available at the location of the remote control unit, three type 4-HKH-45 M storage batteries are brought to this location. The anode supply voltage is then obtained from a type B...-10-12/...601/vibrator converter which is built into the B...Y remote control unit.

The cable from the rectifier or from the storage batteries is connected to the 10-contact connector ..601 on the front panel.

The selector switch ...603 has three positions and switches the supply circuits according to the type of current available, in the center position the power source is disconnected from the supply circuits.

For a 220 a.c. power line supply the switch ..603 is set to the left position/as ..... the diagram fig.6-20/ The +275 voltage is conducted from contact 10 of the connector ...601 over the dropping resistors R.605 and R.605-1 connected in parallel, over the deck "____" contacts of selector switch ..603 and over the 0,25 amp fuse B 601 to the anodes of the amplifier vacuum tubes and this voltage is applied further to the contact of the V voltmeter ..601 push button /..603.

Simultaneously this + 275 voltage is conducted from the same contact 10 over the dropping resistors R 605-2 and R 605-3 which are connected in parallel, and over the deck "a" contacts of the selector switch ..603 to the "____" contact of the connector ..602. A cable from the type ...-10-... audio oscillator is connected to this point.

The dropping resistors in the +275 Volt circuit are absolutely necessary, since in the anode supply circuit of the amplifier xxx vacuum tubes and the audio oscillator require a voltage of 220 volts.

From contact 9.....

Declassified in Part - Sanitized Copy Approved for Release 2013/10/18 : CIA-RDP80T00246A071100330001-5

Declassified in Part - Sanitized Copy Approved for Release 2013/10/18 : CIA-RDP80T00246A071100330001-5
NO FOREIGN DISSEM

50X1-HUM

From contact 9 of the connector /..601 the 5,5 volt voltage is led over the deck "_____" x contacts of selector switch..603 for supplying the microphone circuits and further to the contact of the x voltmeter push-button ..603.

The +27 V voltage is led from the contact 6 of the connector ..601 xxx over the dropping resistors R 610 and R 611, which are connected in parallel, and over the deck "_____" contacts of the selector switch ...603 for supplying the reception-transmission relay /-)601/.

The 6,3 Volt a.c.power supply for the filaments of the amplifier and audio oscillator vacuum tubes, and for the illuminating lamp/..602-1/ and the pilot lamp/..602/ comes from the contacts 3 and 4 of the same connector ..601, with the circuit from the contact 4 led over the deck "...." contacts of the supply selector switch ...603.

If the unit is powered from storage batteries two voltages are aplied to the ..601 connector; +13 Volts to contact 2 and + 6,5 V to x contacts 4 and 9.

The selector switch ..603 is set to its right xxxx position/see t the diagram/. The 13 V voltage is led from the deck "e" contacts of the selector switch ..603 over the dropping resistors R 606 to the vibrator converter B..-10-12/....601/ which supplies the 220 V d.c. to the anode of the amplifier and audio oscillator vacuum tubes.

The dropping resistor R.606 is connected in the circuit when the storage batteries are freely charged, if their voltage drops, the resistor may be short-circuited by the toggle switch ...604.

The 13 volt receive-transmit relay coil/-)601/supply voltage is led over the deck "....." contacts of the selector switch

//603 and the.....

SECRET
NO FOREIGN DISSEM
Declassified in Part - Sanitized Copy Approved for Release 2013/10/18 : CIA-RDP80T00246A071100330001-5

Declassified in Part - Sanitized Copy Approved for Release 2013/10/18 : CIA-RDP80T00246A071100330001-5

50X1-HUM

//603 and the dropping resistors R 612 and R 612-1, which are connected in parallel.

The 6,5 V comsumption points are supplied over deck "_____" and "_____" contacts of the selector switch //603.

The voltmeter/type M5-2/..601 with two measuring ranges of 0 to 30 volts and 0 to 300 volts is used for checking of the anode supply voltage of the amplifier/and the audio oscillator.and for checking of the microphone supply circuit. The voltmeter reads the microphone circuit supply voltage continuously.

When it is necessary to check the anode voltage, the momentary contact push button //605 is depressed and the voltmeter is thereby connected to the anode supply voltage with the multiplier resistor R 607 in series with the voltmeter.

When the value of the tested voltages is normal, the voltmeter needle will be in the colored range of the scale.

3. Design features.

The remote control unit consists of a chassis with a vertical front control panel screwed to it/ see fig. 6-21/.

The chassis contains transformers, chokes, condensers, a vibrator converter, vacuum tube sockets, relays and other components.

The front panel of the control unit contains multi deck selector switches push buttons and toggle switches., volume controls, jacks for the telephone receiver connection, receptacles for connection of the telephone hand set, microphone with its switch, and for the field telephone TA..-43, connectors for the helmet-phone, for attaching the supply cable of the unit and the audio oscillator cable, seven spring binding posts for the connection of the connecting line cable and grounding conductor, the dynamic loudspeaker,

two voltmeters,.....

Declassified in Part - Sanitized Copy Approved for Release 2013/10/18 : CIA-RDP80T00246A071100330001-5

Declassified in Part - Sanitized Copy Approved for Release 2013/10/18 : CIA-RDP80T00246A071100330001-5
NO FOREIGN DISSEM

dynamic loudspeakers, two voltmeters, a fuse, a pilot lamp and a panel illuminating lamp.

The side walls between the chassis and the front panel carry the following: a spare vibrator, gasseous discharge tubes, the voltmeter cuprox rectifier column, several resistors and other components.

On a separate panel are besides the discharge tubes also the type //K fuses.

The chassis and panels are placed in an aluminium housing, which is closed on the left hand side by two covers which are attached to the housing by two hinges. In the rear part of the housing is small compartment for storing the microphone, the throat microphone; themicrophone cord switch, the telephone lever bar switch, two sets of head phones, cables and a cord for connecting the audio oscillator and a box in which two spare GHBC vacuum tubes, five pilot lamps and ten type //K fuses are placed.

The front control panel carries push buttons and selector switch knobs, volume control knobs, toggle switch knobs, microphone and receiver jacks, terminals and connectors and spring binding posts a fuse a colored lens above the pilot lamp and a feflector above the panel illuminating lamp. Besides these the front panel carries special screws for fastening the chassis and panels to the housing/ and two hocks are fastened to front panel by which the chassis and panels can be withdrawn from the housing or replaced into it. There is an opening in the front panel facing the dynamic loudspeaker.

Inscriptions for all of the knobs, jacks, push buttons, terminals, connectors and instruments of the front panel are marked on the front panel.

NO FOREIGN DISSEM
Declassified in Part - Sanitized Copy Approved for Release 2013/10/18 : CIA-RDP80T00246A071100330001-5

Declassified in Part - Sanitized Copy Approved for Release 2013/10/18 : CIA-RDP80T00246A071100330001-5
NO FOREIGN DISSEM

50X1-HUM

All the components bear markings which correspond to number and letter codes of these components in the schematic diagram. A view of the open remote control unit is given by fig. 6-22.

6-8. The individual control operations which are performed by the remote control unit B..Y.

The remote control unit perform .... the following operations in the radio communication unit:

1) Selection of the mode of operation.

2) Selection of one of the four transmitter and receiver, communication channels which have been tuned and secured in advance.

3) Adjustment of the necessary audio frequency voltage input to the connecting line,

4) Modulation of the transmitter by means of the carbon microphone, the throat microphone or the hand set microphone of the field telephone T..M-43.

5) Volume control of the signals received by the main receiver which are reproduced by the head phone or dynamic loudspeaker, the connection or disconnection of the dynamic loudspeaker amplifier in the remote control unit.

6) Transition from transmission to reception and vice versa.

7) Switching the power supply circuits according xxdxxixxx to the type of power available.this operation has been described above during the description of the control unit schematic diagram/.

For service telephone communication with the radio van the remote control unit is equipped with a type T..M-43 field telephone.

As was mention ad previously, the control of the radio communication unit from the remote control unit B...Y is achieved by four conductors/.....

Declassified in Part - Sanitized Copy Approved for Release 2013/10/18 : CIA-RDP80T00246A071100330001-5

Declassified in Part - Sanitized Copy Approved for Release 2013/10/18 : CIA-RDP80T00246A071100330001-5
NO FOREIGN DISSEM

50X1-HUM

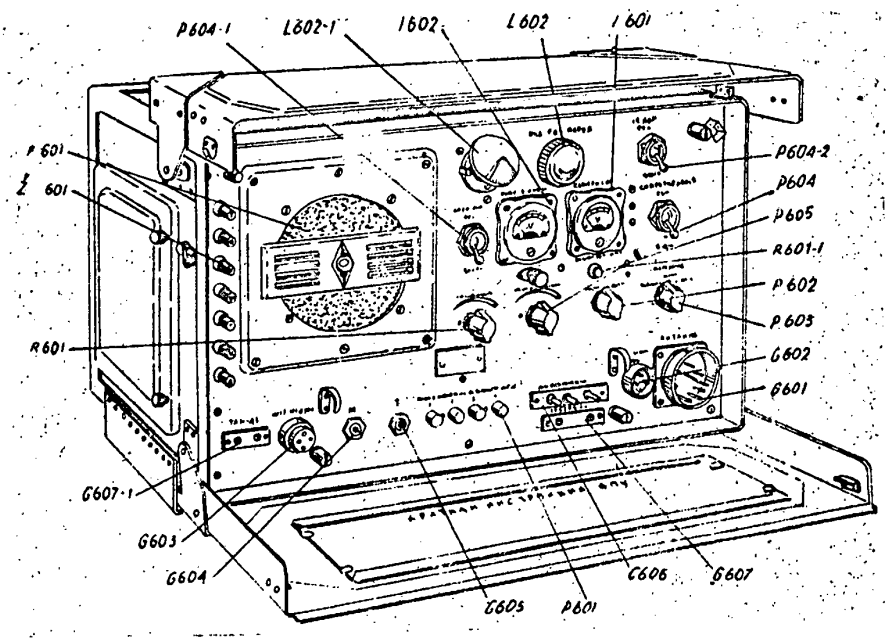

Fig. 6-21. Remote control unit (B...Y) (general view).

conductors/conductors 7,8,9 and 10/.

The first two conductors/7 and 8/. Switch the radio communication unit from reception to transmission and xxx vice versa, they are also used for service telephone communication and signal the operating readiness of the transmitter on the remote control unit B...Y.

The other two conductors/9 and 10/ are used for the communication channel selection of the transmitter and main receiver, for remote transmitter modulation and listening to the signals of the main receiver when using either simplex or semi-duplex communication/

During remote control the relay circuits are supplied with 180 volts, which are obtained from the control line rectifier,

which is located.....

Declassified in Part - Sanitized Copy Approved for Release 2013/10/18 : CIA-RDP80T00246A071100330001-5

Declassified in Part - Sanitized Copy Approved for Release 2013/10/18 : CIA-RDP80T00246A071100330001-5
NO FOREIGN DISSEM

50X1-HUM

which is ~~xxxx~~ located in the transmitter rack.

From the above, it is obvious that the same conductors carry both d.c. and a.c. voltages which are necessary for better utelization of the control circuits/for reduction of the number of conductors/.

To achieve this, both the central control unit ..... and the remote control unit ..... use the blocking condensers and blocking chokes.

It is necessary to switch the control selector switch ..402 on the central control panel .....Y to the position "B..Y" before the radio communication unit may be controlled from remote control unit B...Y.

Now we shall consider the control of the radio communication unit from the remote control unit B..Y.

a) Selection of the mode of communication and transition from reception to transmission.

The selection of the mode of commu ication of the radio communication unit from the remote control unit B..Y is performed by the mode of communication selector switch ....602 which may be set in two positions. At the selector switch knob on the panel are these inscriptions : "_____"/"mode of communication"/ "_____"/"Semi-duplex". and "_____"/"Duplex"/.

When it is necessary to operate with the mechanical semi-duplex, the knob of this selector switch is set to "_____" "Semi-duplex". and the transition from transmission to receiption is performed by means of the push-buttons on the handle of the carbon microphone or on the cord switch of the throat microphone, or, finally by means of the lever switch of the hand set microphone of the field telephone set T..M-43.

By pressing the push.....

SECRET
NO FOREIGN DISSEM
Declassified in Part - Sanitized Copy Approved for Release 2013/10/18 : CIA-RDP80T00246A071100330001-5

Declassified in Part - Sanitized Copy Approved for Release 2013/10/18 : CIA-RDP80T00246A071100330001-5
NO FOREIGN DISSEM

50X1-HUM

By pressing the push button of the lever switch, the c... throat or field microphone circuits are energized /see fig. 6-18/ and the conductors 7 and 8 or the supply circuit are connected to the chassis in series with the interconnected three relay coils: the interlocking relay/-)401/ in the central control unit, the connecting line relay/-)602/ and the transmitter operating readiness signaling relay/-)602-1/ in the remote control unit B...Y /see the circuit diagram of the & control circuits of the radio communication unit/.

From the diagram it will be observed that the relay -)401 in the central control unit .....Y and the relay -)602 in the remote control unit B...Y are energized when the above mentioned circuit passing through its coil is not sufficient to magnetizing and attract its armature. The interlocking relay -)401 when closing completes with its contacts 1-2 the supply circuit of the connecting line relay coil -)402-3 in the central control panel ....Y. This relay is supplied with 26 volts. If the relay -)402-3 is energized its contacts 1-2 ground the supply circuit/26 V/ of the relay coil -)102/ the transmitter reception-transmission relay/, while the contacts 4-5 connect the remote control unit to the input circuits of the audio frequency section of the transmitter.

The transmitter commences to operate. The transmitter operation indication relay -)103 closes and its contacts connect the resistors R 405^{x} in parallel to the two dropping resistors R 406^{x} and R 416^{x}, which are connected in parallel with each other. As a result of this the current in the control circuit of the conductors x 7 and x 6 rises. As a result of this the relay -)602-1

coil current .....

SECRET
NO FOREIGN DISSEM
Declassified in Part - Sanitized Copy Approved for Release 2013/10/18 : CIA-RDP80T00246A071100330001-5

Declassified in Part - Sanitized Copy Approved for Release 2013/10/18 : CIA-RDP80T00246A071100330001-5
NO FOREIGN DISSEM

50X1-HUM

coil current in the remote control unit also rises. This relay closes and completes the 6,3 V pilot lamp ..602 circuit, the lit lamp indicates that the transmitter is in operating readiness and it is possible to start the transmission.

If the connecting line relay -) 692. in the remote control unit B...Y/ is energized its contacts connect the reception-transmission relay coil/-)601/ in the remote control unit to the 12-13 Volt supply. The closed -)601 relay contacts 5-6 connect the microphone amplifier output with the conductor ± 9 over the blocking condenser C 605 and the fuse B 601-2 and with conductor ± 10 connecting the remote control unit over the fuse B 601-3 with the radio van. The contacts/2-3 however, short circuit the input of the dynamic loudspeaker in the remote control unit. After-depressing the carbon microphone push button, or the throat-microphone cord switch push button or the field telephone lever bar switch, it is thus possible to start transmitting from the remote control u it B...Y.

By releasing the push button or lever switch, the radio communication unit adjusts itself for reception, the output of the main receiver is connected to the remote control unit to radio ~~EX~~ van connecting line conductors ±9 and ± 10/see fig. 6-19/, the receive-transmit relay coil/-)601/ in the remote control unit B...Y is without current, whereas across its contacts 5-4 the conductors 9 and 10 of the connecting line are connected to the dynamic loudspeaker and phone receivers/separately either the helmet phone or the hand set phone. and this is accomplished either via the amplifier or only through the transformer T 602.

After releasing the carbon microphone push button or the cord switch push button of the throat microphone or the lever bar switch of the....

SECRET
NO FOREIGN DISSEM
Declassified in Part - Sanitized Copy Approved for Release 2013/10/18 : CIA-RDP80T00246A071100330001-5

Declassified in Part - Sanitized Copy Approved for Release 2013/10/18 : CIA-RDP80T00246A071100330001-5
NO FOREIGN DISSEM

50X1-HUM

par switch of the field telephone it is possible to realize reception from the remote control unit B..Y/ to listen to the signals of the main receiver/.

Duplex communication with the remote control unit is possible only when the radio communication unit is equipped with a portable receiver unit and a special antenne system. In this case the radio van must be connected with the remote control unit B..Y with two additional conductors /11 and 12/. The mode of communication selector switch/..602/must be set to the "_____"/"Duplex"/position.

The radio communication unit may be used for simplex communication and controlled from the remote control unit. The mode of communication selector switch/..602/is set to the position "_____" "Duplex"/ and the microphone push button is depressed, since it is necessary to energize the microphone supply circuit. For reception the mode of ~~xx~~ communication selector switch is set to the "_____"/ "Semi-duplex"/ position.

2. Selection and switching of the transmitter and main receiver communication channels.

This operation is performed by means of a four-push-button selector switch ..601/see the radio communication unit control schematic diagram/. Above the push buttons on the front panel of the remote control unit B..Y is the inscription "_____ _____"/"operating channel selector"/ "1", "2", "3" and "4".

By pressing the respective push button of the 1st, 2nd and 3rd channels the current circuit of the coils of either one or the other of the channel selector and switching relays/-)402-1 or 402-2/ in the central control unit .....Y, or of both relay simultaneously closes ~~x~~ via the 9th and 10th conductors.

Declassified in Part - Sanitized Copy Approved for Release 2013/10/18 : CIA-RDP80T00246A071100330001-5

Declassified in Part - Sanitized Copy Approved for Release 2013/10/18 : CIA-RDP80T00246A071100330001-5
NO FOREIGN DISSEM

50X1-HUM

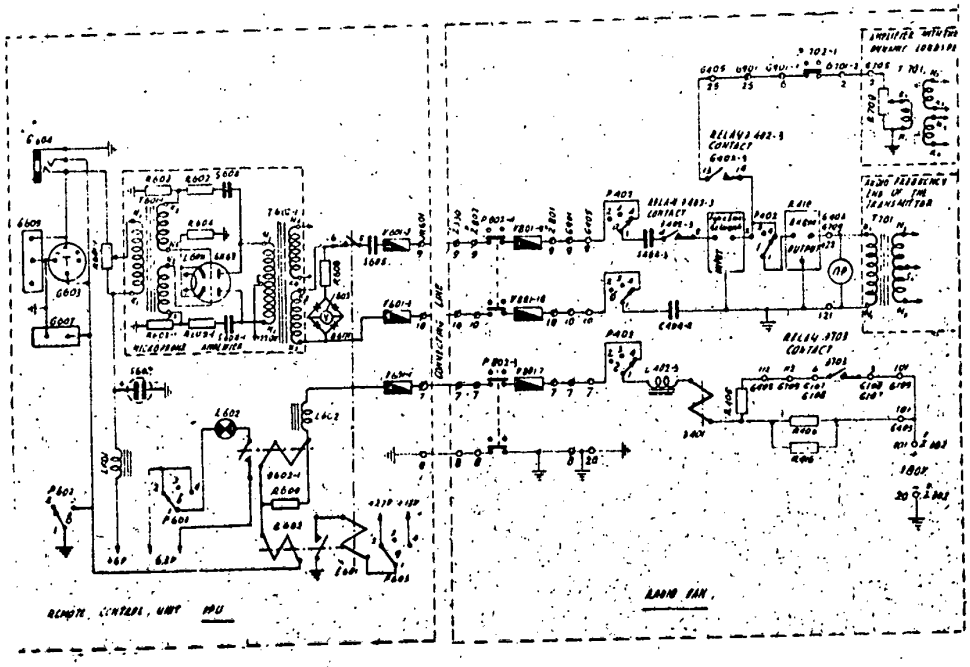

Fig. 6 - 23. Schematic diagram of the audio frequency input circuits for remote modulation of the transmitter (from the remote control unit (B...Y).

SECRET
NO FOREIGN DISSEM
Declassified in Part - Sanitized Copy Approved for Release 2013/10/18 : CIA-RDP80T00246A071100330001-5

Declassified in Part - Sanitized Copy Approved for Release 2013/10/18 : CIA-RDP80T00246A071100330001-5
NO FOREIGN DISSEM

50X1-HUM

By pressing the 4th.channel push button both of these relays are without current. After each depression of one of the channel selector push button the previously depressed push button jumps out.

The relay, by means of their contacts, switch over the circuits of the automatic electromechanical tuning devices for selecting the communication channels of the transmitter and of the main receiver. The diagrams of these circuits are given by fig. 6 - 10 and a detailed description of the function of this system is given in paragraph 6 - 4.

3. Transmitter modulation from the remote control unit B...Y.

The schematic diagram of the audio frequency input circuits during the remote transmitter modulation is given by fig. 6 - 23. From the diagram it is obvious that the modulating voltage is transmitted from the microphone line conductor ±9 and 10. The value od this voltage is controlled by the cuprox voltmeter ..602 and it is adjusted by means of the volume control R 601-1 in the amplifier input.

In the radio van the modulating voltage is led to an equalizing network and then via a manual control of the modulation level / PP..M.R.410 to the primary winding of the input transformer T101 of the transmitter audio frequency section pre-amplifier.

Besides this, the modulating voltage on the far side of the equalizing network is also applied to the input of the dynamic loudspeaker amplifier via the contacts 14-13 of the connecting line relay -)403-3, via the contacts 25 of the terminal board ..405, via the terminal 25 of the terminal board ..901, via contact 6 of connector ..701-5, via the toggle switch ..702-1/ in the position "_____"

SECRET
NO FOREIGN DISSEM
Declassified in Part - Sanitized Copy Approved for Release 2013/10/18 : CIA-RDP80T00246A071100330001-5

Declassified in Part - Sanitized Copy Approved for Release 2013/10/18 : CIA-RDP80T00246A071100330001-5
NO FOREIGN DISSEM

/"closed"/, via contact 2 of the connector 701-2 and the contac50X1-HUM
2 of the connector ..705. This way it is possible to monitor the transmitted/modulating/signals by means of the dynamic loudspeaker amplifier in the radio van. Table 6 - 1 lists the locations for monitoring these signals in the radio van and they are differenciated according to the position of the switches in the central control unit/in the radio van/and on the remote control receiver panel.
The equalizing networkm as was explained before, is used for qualizing/correcting/the frequency attenuating characteristic of the interconnecting cables, in order to reduce the frequency distortion of the modulating voltage transmitted by these cables.

Equelization is used if the remote control unit B...Y is located more than 3 kms.away from the radio van. The frequency distortion of the connecting lines and its equalization is described in detail below.

4. Monitoring the signals of the main receiver at the remote control unit B..Y.

The schematic diagram of the main receiver, during remote control by the remote control unit /B..Y/, is given by fig.6-24. The ~~xxxxxx~~ receiver selector switch ..403 on the control unit must be set to the position ....Y, as is also indicated in the diagram. The main receiver signal output is applied to the conductors ±9 and ±10 of the connecting line ocer the contacts of the decks of two selector switches ..403 and ..402, over the normally closed contacts 7 - 6 of the duplex relays -) 402 and over the contacts 3-4 of the connecting line relays -) 402-3, over the blocking condensers C 404-2 and C 404-3, over the contacts 1-4 of selector switch 492 deck "a" and b" and over the fuses and the toggle switches of the

Declassified in Part - Sanitized Copy Approved for Release 2013/10/18 : CIA-RDP80T00246A071100330001-5

Declassified in Part - Sanitized Copy Approved for Release 2013/10/18 : CIA-RDP80T00246A071100330001-5
NO FOREIGN DISSEM

50X1-HUM

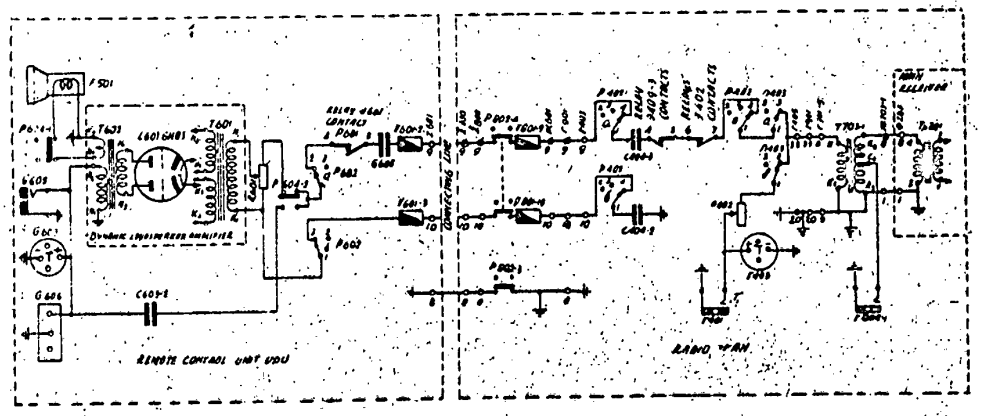

Fig. 6-24. Schematic diagram of the main receiver output circuit when controlled by the remote control unit.

SECRET
NO FOREIGN DISSEM
Declassified in Part - Sanitized Copy Approved for Release 2013/10/18 : CIA-RDP80T00246A071100330001-5

Declassified in Part - Sanitized Copy Approved for Release 2013/10/18 : CIA-RDP80T00246A071100330001-5
NO FOREIGN DISSEM

50X1-HUM

connecting line panel.

In the remote control unit B...Y the signal circuit is completed from the front panel terminals "9" and "10" over the fuses B.601-2 over the blocking condenser C 605, over the normally closed receive-transmit relay -)601 contacts 5-4, over the mode of communication selector switch contacts 1 - 2 of decks "a" and "____", to the toggle switch 604-2/from the deck "a"/tothe potentiometer R 601/from deck "____"/.

The toggle switch ..604-2 connects and disconnects the dynamic loudspeaker amplifier. When the amplifier is connected, the receiver signal voltage is applied to the potentiometer/volume control/ R 601 a at the input of the amplifier. When the amplifier is disconnected, the input signal is applied over the blocking condenser C 603-2 to the beginning H_3 of the secondary winding H_3 K_3 of the output transformer T 602/the other winding lead K_3 is connected to the conductor ±8 of the connecting line/and can drive the headphone/ either the regular set or the helmet set/ of the field telephone receiver. The dynamic loudspeaker Ø 601 may be connected to the winding H_4 K_4 by means of the toggle switch ..604-1.

The amplifier is disconnected/by open circuiting the filament heater circuit of its ж vacuum tube/when the receiver signal voltage is sufficiently strong for normal dependable driving of the loudspeaker without the amplifier.

5. The service telephone communication between the remote control unit B..,Y and the radio van.

The ~~remote~~ service telephone communication between the remote control unit B..Y and the radio van is realized by means of two type ТА..-43 field telephone through the conductors ± 7 and ± 8 of the connecting line.

SECRET
NO FOREIGN DISSEM
Declassified in Part - Sanitized Copy Approved for Release 2013/10/18 : CIA-RDP80T00246A071100330001-5

Declassified in Part - Sanitized Copy Approved for Release 2013/10/18 : CIA-RDP80T00246A071100330001-5
NO FOREIGN DISSEM

The circuit ~~is~~ diagram of this communication is given 50X1-HUM
fig. 6-25. The diagram is simple and does not reguire any further explanation.

6 - 9. Equalization/ correction/of frequency distortion caused by the connecting lines.

1./ General.

The attenuation of the radio van to the remote control unit connecting line conductors depends on the length of these conductors, on the transmitted frequency and on the value of the load at the end of this line, on weather conditions which effect the per unit length distributed parameters of the line/ the per unit length distributed capacity, induction, resistance and conductivity/. And at the same time the attenuation is increased by prolonging the connecting line length and by increasing the signal frequency transmitted by the line.

The attenuation dependence on frequency manifests itself in the frequency distortion,

of the audio frequency signal transmitted by the line: The high frequency components have a distinctly greater attenuation than the low frequency ones have.

When the length of the lineis increased the frequency distortion also increases.

To reduce the frequency distortion of the modulating voltage transmitted by the connecting lines, it is necessary to equalize/correct/ the frequency attenuation characteristic of these lines/this frequency characteristic depends on the connecting line length and on weather conditions/.

2. The Equalizing network.

The schematic diagram. The equalizing network given given by fig.6-26

SECRET
NO FOREIGN DISSEM
Declassified in Part - Sanitized Copy Approved for Release 2013/10/18 : CIA-RDP80T00246A071100330001-5

Declassified in Part - Sanitized Copy Approved for Release 2013/10/18 : CIA-RDP80T00246A071100330001-5

given by fig. 6-26 is used for frequency distortion compensation of the connecting lines. The equalizing network actually represents a four terminal "T/2" connected network consisting of variable resistors, induction coils and condensers. These circuit components are arranged and connected in such a way that the electric characteristic and thus the frequency attenuation characteristic may be changed by means of a selector switch. The characteristic changes inversely with respect to t the frequency attenuation characteristic of the connecting line, i.e. the low frequencies are attenuated by the equalizing network to a much greater degree than the high frequencies which pass almost without attenuation. The equalizing network forms a constant - resistance network, i.e. its input resistance is constant and independent of the input frequency/when terminated in a characteristic impedance/. When the selector switch ..409 is in the position "1", the equalizing network is ~~xxx~~ cut out, position "2" corresponds to the minimum circuit attenuation, whereas position "8" correspond to its maximum attenuation.

Design Features.

The ~~x~~mechanism design of the equalizing network represents a block which is inserted into the central control unit panel. The network ~~xxxxxxx~~ consists of the following elements.

1) An 8-position selector switch ..409

2) Two sets if induction coil.

3) Two b boards with condensers and resistors.

The assembled elements are covered by an aluminium housing which is attached by three screws to the pabel. The equalizing network block is fastened by 3 screws to the reverse side of the central control unit panel ....Y. Through the front of the pabel protrudes. The selector switch ....Y central control panel has anengraved.

Declassified in Part - Sanitized Copy Approved for Release 2013/10/18 : CIA-RDP80T00246A071100330001-5

Declassified in Part - Sanitized Copy Approved for Release 2013/10/18 : CIA-RDP80T00246A071100330001-5
NO FOREIGN DISSEM

50X1-HUM

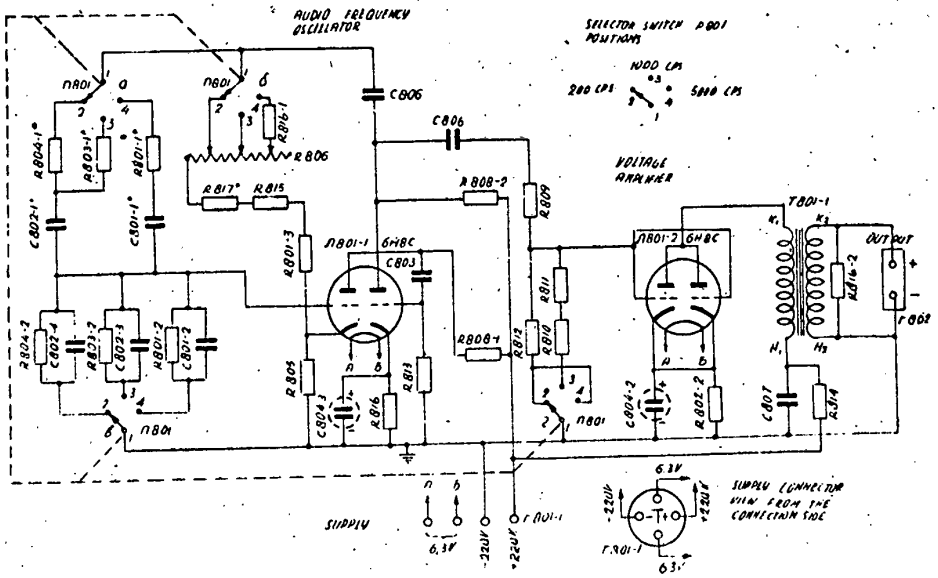

Fig. 6 - 27. Schematic diagram of the type 3..-10-.. audio frequency oscillator.

SECRET
NO FOREIGN DISSEM
Declassified in Part - Sanitized Copy Approved for Release 2013/10/18 : CIA-RDP80T00246A071100330001-5

Declassified in Part - Sanitized Copy Approved for Release 2013/10/18 : CIA-RDP80T00246A071100330001-5
NO FOREIGN DISSEM

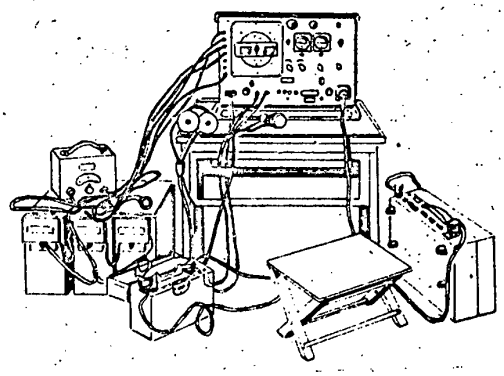

Fig. 6-22. Laid out remote control equipment.

inscription above this knob "_____/ line correction"/ and numerals "1", "2", "3", "4", "5", "6", "7" and "8".

3. The type 3..- 10 - 8. audio frequency oscillator.

The radio communication unit is equipped x with a portable type 3.. - 10 - 6 audio oscillator, which is required for equalizing the connecting line attenuation frequency characteristic. The audio oscillator has three fixed frequencies: 200, 1000 and 5000 cps. The maximum frequency deviation from the nominal value is ± 20%. The output voltage of the audio oscillator is adjusted to produce 10 volts at the microphone amplifier output of the remote control unit B..Y for any audio oscillator frequency.

The coefficient of non-linear distortion of the output voltage is about 20%.

The following supply voltages are x necessary for the audio oscillator 3 - 10 - : 220 V anode supply and 6.3 V filament supply. The high voltage current consumption is 15 to 20 ma. The desired frequency selection is performed by turning the selector knob.

Declassified in Part - Sanitized Copy Approved for Release 2013/10/18 : CIA-RDP80T00246A071100330001-5

Declassified in Part - Sanitized Copy Approved for Release 2013/10/18 : CIA-RDP80T00246A071100330001-5
NO FOREIGN DISSEM

50X1-HUM

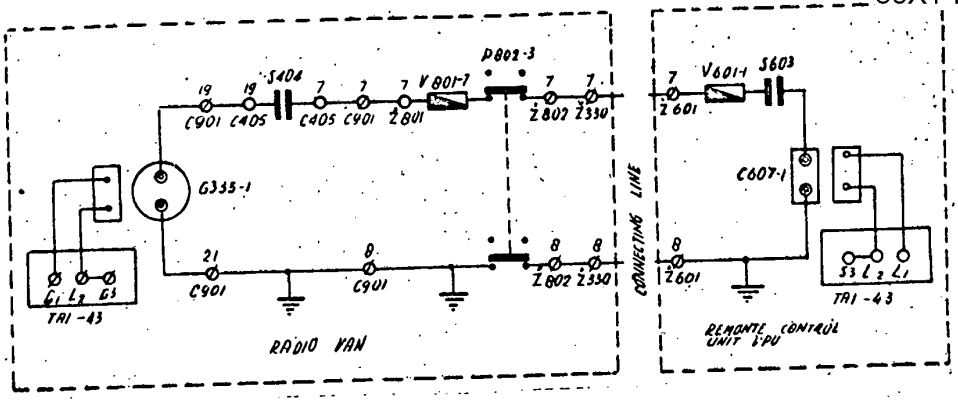

Fig. 6-25. Schematic diagram of the service telephone communication between the radio van and the remote control units.

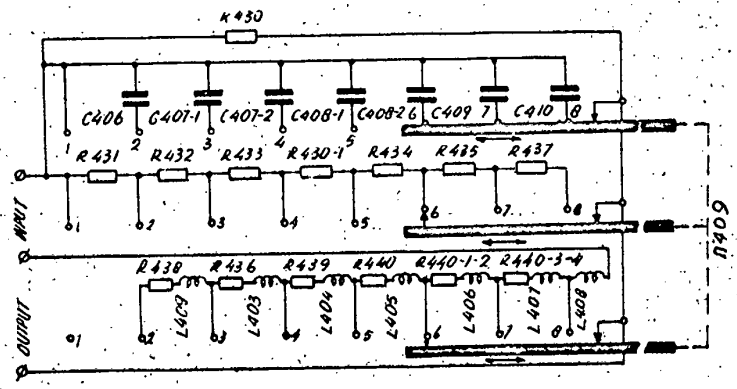

Fig. 6-26. Equalizing network schematic diagram.

Declassified in Part - Sanitized Copy Approved for Release 2013/10/18 : CIA-RDP80T00246A071100330001-5

Declassified in Part - Sanitized Copy Approved for Release 2013/10/18 : CIA-RDP80T00246A071100330001-5

50X1-HUM

The schematic diagram. The type 3.. - 10 - .. audio oscillator / fig. 6-27 consists of three stages: the first two stages actually represent the audio frequency oscillator whereas the third stage works as voltage amplifier of the audio frequencies obtained from the oscillator stage.

The audio frequency oscillator / the 1st. and 2nd. stages. is formed by connecting resistors and condensers to the type 6 H 8 C/801-1/twin triode. The distinguishing feature of this oscillator is the lack of resonant circuits.

The oscillator uses positieve feedback for self axitation. These circuits consists of:

1) At the frequency of 200 cps. - the blocking condenser C 805 the resistor R 804 - 1 connected in series with the condenser C 802 - 1 between the anode circuit of the second stage triode and the grid of the 1st. stage triode, and the resistor R 804-2 connected in parallel with the condenser C-802 - 4 in the grid - to - cathode circuit of the 1st.stage triode.

2) At a frequency of 1000 cps.- the blocking condenser C 805, the resistor R 803 - 1 the condenser C 802-1 are connected in series and the resistor R 803-2 connected in parallel with the condenser C 802-3. These components are connected between the stages in a similar as the previous case.

3) At the frequency of 5000 cps. - the blocking condenser C.805, the resistor R801-1 and the condenser C8d. are connected in series and the resistor R 801-2 connected in parallel with the condenser C 802-3. These components are connected between the two stages in a similar way to the previous cases.

Negative feedback is used - to equalize the output voltage of the oscillator at these three frequencies. The negative feedback circuits consists of the following:

Declassified in Part - Sanitized Copy Approved for Release 2013/10/18 : CIA-RDP80T00246A071100330001-5

Declassified in Part - Sanitized Copy Approved for Release 2013/10/18 : CIA-RDP80T00246A071100330001-5
NO FOREIGN DISSEM

following :

1) At the frequency of 200 cps. - the blocking condenser 805, a part of the resistor R 806 and resistors R 817, R 815, R 801-5 and R 805 connected in series.

2) At the frequency of 1000 cps - the blocking condenser C 805, a part of the resistor R 806 and resitors R 817, R 815, R 801-5 and R 805 connected in series.

3) At the frequency of 5000 cps.- the blocking condenser C 805, the resistor R 816-1, a part of resistor R 806 and resistors R 817, R 815, R 801-3 and R 805 connected in series

The negative feedback voltage for the grid of the first stage triode is obtained across resistors R 805.

The resistors R 808-1 and R 808-2 act. as the anode leads of the first stage and the second stage triodes respectively.

The condenser C 805 in the grid circuit of the second stage triode acts as a coupling condenser and the resistor R 813 is the grid-lesk resistance. The grid bias of the 2nd. stage triode is obtained from the cathode circuit bias R816 shunted by xx the electrolytic blocking condenser C 804-1. The condenser C 806 is the coupling condenser of the third stage triode grid. The resistor R 809 and the resistor R 812/ connected only at frequencies of 200 and 5000 cps./ and the resistors R 810 and R 811/connected only at the frequency of 1000 cps./ act as the voltage divider in the grid of the 3rd. stage vacuum tube ...801-2.

The type 6 H 8 C/..801-2/twin-triode vacuum tube is used as a single stage, the audio frequency amplifier/ the third stage/and its output appears across the T 801-1 transformer.

The resistor R 802-2 and the condenser C 804-2 serve the same purpose as the similar components served in the second s stage.

Declassified in Part - Sanitized Copy Approved for Release 2013/10/18 : CIA-RDP80T00246A071100330001-5

Declassified in Part - Sanitized Copy Approved for Release 2013/10/18 : CIA-RDP80T00246A071100330001-5
NO FOREIGN DISSEM

The output appeares across the resistor R 816-2 and is brought out to the double jack ..802. The resistor R 816-2 eliminates an excessive dependence of the oscillator output voltage on the magnitude and character of the load.

The resitor R 814 together with the condenser C 807 filter the anode circuit of the 3rd.stage vacuum tube.

The audio oscillator supply cable is attached to the connector ..801-1.

A twin load cable with a fork type plug on one end and a three-contact plug on the other and is used for connecting the output of the audio oscillator to the microphone input of the remote control unit B...Y. The audio oscillator together with the cable form a part of the remote control apparatus B..Y.

The procedure for equalizing the connecting line frequency attenuation characteristic is given in the second part of this manual under "Instructions for operation the radio communication unit".

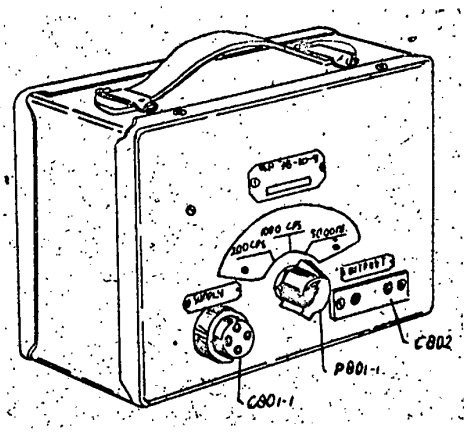

Fig. 6-28. View of the type 3..-10-.. audio frequency oscillator.

Declassified in Part - Sanitized Copy Approved for Release 2013/10/18 : CIA-RDP80T00246A071100330001-5

Declassified in Part - Sanitized Copy Approved for Release 2013/10/18 : CIA-RDP80T00246A071100330001-5
NO FOREIGN DISSEM

CHAPTER 7.

50X1-HUM

Layout of the radio communication equipment.

The layout of the equipment depends on the state in which the radio communication unit happens to be-whether it is in marching or operating order.

The instructions for the use of the radio communication unit list detailed instructions for setting up of the radiocommunication unit,

7-1 The layout of the radio communication unit equipment.

1. General.

The radio communication units consists of a type 3NC-151 radio van automobile with a heated body and a type 1-AII-3 trailer which carry all the working equipment, spare and auxiliary parts of the radio communication unit with the main communication units, i.e. the receiver and transmitter, located in the body of the van, whereas the open trailer carries the type C-15/8 15KVA, 220 V electric power plant for supplying the radio communication unit.

The weight of the main components of the radio communication unit are listed in the table 7-1 .

2. The layout of the radio communication van.

The type YKB-250 transmitter is located near the front wall on the right hand side inside the radio van/see fig.7-1/ and on the left hand side the type BCP-6 rectifier is located.

The radio operato's desk is placed between the transmitter and the rectifier rack. The common panel of both receivers is mounted on the desk and above it are the main and auxiliary receivers. Inside the desk is the main receiver supply rectifier and also a portable type 03-1,5 electric heater. In the desk drawer is a folder with technical date of the radio communication unit. The top desk may be lifted for the convenience of the radio- operater.

SECRET
NO FOREIGN DISSEM
Declassified in Part - Sanitized Copy Approved for Release 2013/10/18 : CIA-RDP80T00246A071100330001-5

Declassified in Part - Sanitized Copy Approved for Release 2013/10/18 : CIA-RDP80T00246A071100330001-5

In front of the desk is a revolving chair fastened down with wingnuts.

On the front well of the van is the amplifier with a dynamic loudspeaker, the connecting line panel, tanl seismic type clock and an adjustable lamp for illuminating the radio operator's desk.

Near the right hand side wall of the van is a chest type seat which holds a part of activeq spare and auxiliary components of the radio communication unit, namely the storage batteries, two disk and cone type antennes, two feeder reels, a part of the directional antenna components and other equipment. The lid of the ch chest is upholstered with leatheretta. On the wall above the chest is a semidoft folding, train type shelf. By means of swinging brackets this shelf may be fixed in the horizontal plane and used as a bed. When lowered it forms a back rest to the xx chest seat.

The control panel of the auxiliary receiver is attached to the left hand side wall of the van. Above it is an electric ventilato of the ..T-75 type. The ventilator opening, may be covered on the inside of the van by an insulating pad, whereas on the outside of the van it is covered by a folding blind which may be manipulated from the inside of the van by a handle located to the wooden frame of the ventilator.

Below the ventilator a folding table is attached to the wall.

At the left wall stands a pedestal chest which holds part of the storage batteries and a part of the spare components. This chest carries on its top a distribution cabinet and on top of it is the type BC3-1 battery charger rectifier. Behind the power distribution cabinet are mounted two convertors of the PY-45A type which may be lowered by means of rods; one for supplying the main receiver and the other one for supplying the auxiliary receiver.

Declassified in Part - Sanitized Copy Approved for Release 2013/10/18 : CIA-RDP80T00246A071100330001-5

Declassified in Part - Sanitized Copy Approved for Release 2013/10/18 : CIA-RDP80T00246A071100330001-5
NO FOREIGN DISSEM

50X1-HUM

A little closer to the door is a closet with four boxes containing some working working, spare and auxiliary equipment. On top of the closet are two tent windows and a folding table wrapped in covers.

Next to the door stands a wood burning above and a wood bin and on top of the stove is a container for heating water, whereas on top of the bin is the chimney bonet which is used when using the stove on the sight.

On the floor in front of the type BCP - 6..rectifier the remote control unit B..Y is fastened down by clamps and two rods and next to it is fastened down with belts the type BCN-2 rectifier for supplying the auxiliary receiver/this rectifier is the portable supply for the remote control unit B..Y/.

On the ceiling of the van are four illuminating lamps. A bxm cable box with two compartments holding a part of the antenna guy cables, reels with the ..Y.. - 7 cable, power cables, a power line pole panel and other components, is located on the outside front wall of the van above the driver's cab. A panel for the power supply connections, for the remote equipment connecting line attachment, and for the trailer signal and power cables is mounted on the left part of the cablesbox. This panel has one 220 V receptable and two 26 V receptables. One of the 26 V receptables is of special design and is used for supplying the signal light of the antenne tower.

An oil can is located on the roof of the van next to the cable box.

A box holding steel pegs for fastening the antenna guy cables, a mallet and an axe is located crosswise in the rear under the van body.

SECRET
NO FOREIGN DISSEM
Declassified in Part - Sanitized Copy Approved for Release 2013/10/18 : CIA-RDP80T00246A071100330001-5

Declassified in Part - Sanitized Copy Approved for Release 2013/10/18 : CIA-RDP80T00246A071100330001-5
NO FOREIGN DISSEM

A long box mounted under the van on a lifting board lengthwise between the wheels holds components of the directional antenna, the auxilliary receiver antenna and tent poles.

Two steel step ladders are mounted under the van. One of these is used at the entrance to the van and the other at the entrance to the trailer. The rear van wall carries a spade and steel crowbar to the left of the door and a fire-extinguisher to the right of the door.

The telescopic tower is located on two brackets between the body and the driver's cab on the right hand side of the van.

The fastening clamps of the power are held by wing nuts to enable easy removal of the tower in emergencies.

3. The trailer layout.

The type ..-)C15/8 electric engine driven generator set consisting of a type ...A-..-MK.. gasoline/petrol.engine coupled to the type MCA-72/4.A three-phase generator is located in the center of the trailer/see fig. 7-2/.

The type ..CT-80 starter battery is to the right of the engine when viewed from the trailer entrance. A cabinet containing the remote engine starting and stopping contactor is mounted above the battery. The 60 liter fuel tank is mounted on an angle steal structure above the engine.

A type PHA - 14 fuel pump for pumping fuel from spare cans to the main fuel tank is mounted on a pedestal to the right of the fuel tank. An automobile horn for signaling from the van is attached to the front part of the engine - generator bed.

The motor control board is located on the left hand side of the engine - generator pedestal.

The electric distribution panel stands at the left side at

Declassified in Part - Sanitized Copy Approved for Release 2013/10/18 : CIA-RDP80T00246A071100330001-5

Declassified in Part - Sanitized Copy Approved for Release 2013/10/18 : CIA-RDP80T00246A071100330001-5
NO FOREIGN DISSEM

the front of the trailer body. The panel cpntains connectors for the power and the signal cable attachment and two receptacles for 6 and 127 volts and instruments and knobs for checking and controlling the electric power plant. A type TA..43 field telephone is attached to the panel by straps.

Two bags made of asphalt treated tent cloth containing cleaning rags, the type PYH - III automatic voltage regulator and a wrench for the engine carburator are mounted to the right of the panel.

The following items are mounted along the left side of the trailer: a reel with 60 meters of signal cable, one reel with 60 meters of power cable with a flat connector on one end for attachment to the distribution panel and 3 reels with 50 meters of power cable each with cylindrical connectors. One of these three reels is fastened to a winch.

The 50 meter long cables are used when the radio communication unit is powered from a power line, whereas the 60 meter long cables are used when the radio communication unit is powered from its power-plant.

At the left hand edge stands a box containing tools, spare power plant parts and some working components.

A step ladder and a wooden panel with spare engine parts and a spare engine crank are fastened to the left hand side wall.

Two 105 liter fuel cans and two 10 liter oil cans are fastened to the right hand side wall by clamps.

A crowbar and pegs for trailer securement are lightly fastened to the floor.

A spade and a fire extinguisher are mounted on the front outside wall of the trailer body.

The top of the trailer is covered by removable asphalt treated tarpaulin with 3 windows.

Declassified in Part - Sanitized Copy Approved for Release 2013/10/18 : CIA-RDP80T00246A071100330001-5

Declassified in Part - Sanitized Copy Approved for Release 2013/10/18 : CIA-RDP80T00246A071100330001-5
NO FOREIGN DISSEM

50X1-HUM

TABLE 7-1.

Weights of the main elements of the mobile radio communication unit.

Name of the radio communication unit main elements.	Weight in kilograms.
Type YKB-250 transmitter.	363.
Type PCKY-3M receiver with panel.	36.
Control panel of the auxilliary receiver.	2,75
Dynamic loudspeaker amplifier.	7.
Cone and disk type all-directional antena.	5,3
"Wave channel"(Yagi) type directional antenna.	5,7
Telescopic tower (lowered).	90,5
Type 4-NKN-45M storage battery.set.	13
Type BCP-6B rectifier	434/
Type BCP-2 rectifier.	21
Type BCP-1 battery wcharging rectifier.8	45
Type PY-45A converter with filter.	3,6
Remote control unit B..Y.	33,5
Connecting line panel.	5.
Reel with 60 meters of power cable.	29.
Reel with ..T..7 x 2 cable.	12.
Reel with PM-6 feeder cable.	9,5
Electric heater.	19.

Declassified in Part - Sanitized Copy Approved for Release 2013/10/18 : CIA-RDP80T00246A071100330001-5

Declassified in Part - Sanitized Copy Approved for Release 2013/10/18 : CIA-RDP80T00246A071100330001-5
NO FOREIGN DISSEM

50X1-HUM

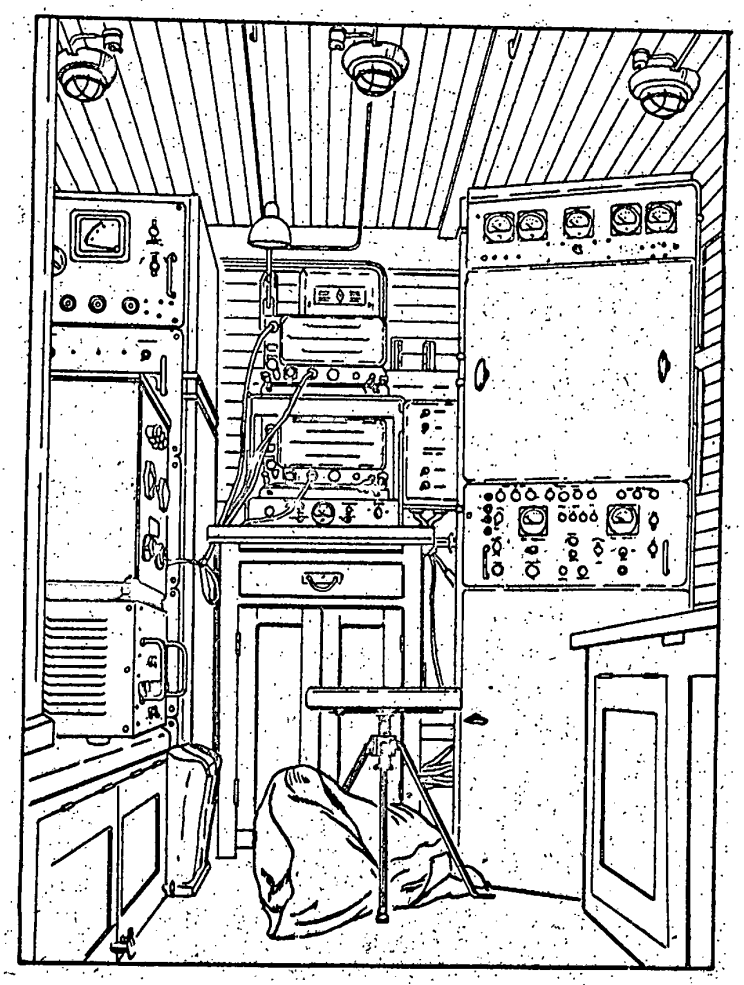

Fig. 7 - 1. Location of equipment and components in the radio van.

NO FOREIGN DISSEM
Declassified in Part - Sanitized Copy Approved for Release 2013/10/18 : CIA-RDP80T00246A071100330001-5

Declassified in Part - Sanitized Copy Approved for Release 2013/10/18 : CIA-RDP80T00246A071100330001-5
NO FOREIGN DISSEM

50X1-HUM

CHAPTER 8.

Illumination, heating and ventilation of the radio van.

8 - 1 Illumination.

Four ceiling lamps and an adjustable lamp located above the radio operator's desk and portable lamps with cords stored in the chest pedestal are available for the illumination of the radio van. The portable lamp may be plugged into receptacle "26V" /..304/ on the panel of the distribution cabinelt or to the "26v" receptacle of the control terminal board ..302 on the rectifier BCP-6..block 4 panel, or into the receptacle "26V/330-1/ on the panel in the cable box section.

The electric lighting circuit diagram is given by fig.8-1.

The lamps are powered by 26V which may be otained from the 220.380 V power-supply from terminals 78 and 79 through a separate step down transformer T 309 which is located in the distri bution cabinet.

When no.a.e. power is available, one of the storage batteries located in the van chest supplies power for the lighting circuit. The lighting circuit is connected to the storage batte ries by the knob of the selector switch ..305 which is located on the front panel of the distribution cabinet. Above the knob of this selector switch are these instructions: "_____"-"_____" "battery charging" "2"/. In th e position "1" the selector switch connects the battery "1", which is located in the seat type chest to the charger rectifier and simultaneously connects the battery ± 2, which is located in the chest pedestal, to the

SECRET
NO FOREIGN DISSEM
Declassified in Part - Sanitized Copy Approved for Release 2013/10/18 : CIA-RDP80T00246A071100330001-5

Declassified in Part - Sanitized Copy Approved for Release 2013/10/18 : CIA-RDP80T00246A071100330001-5
NO FOREIGN DISSEM

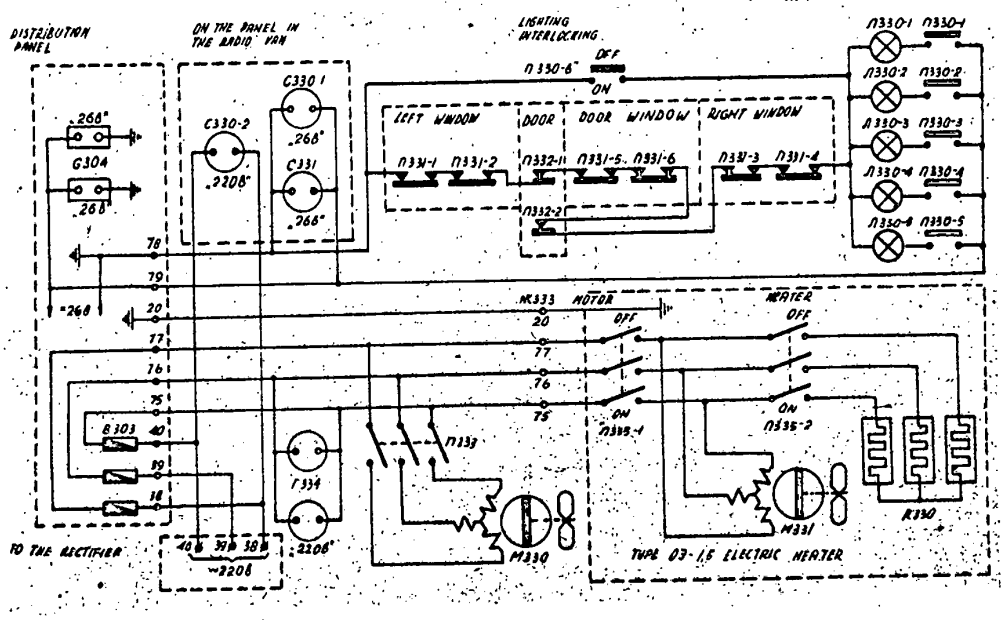

Fig.8-1. The radio van electric lighting, heating and ventilation schematic diagram.

Declassified in Part - Sanitized Copy Approved for Release 2013/10/18 : CIA-RDP80T00246A071100330001-5

Declassified in Part - Sanitized Copy Approved for Release 2013/10/18 : CIA-RDP80T00246A071100330001-5
NO FOREIGN DISSEM

lighting circuit. In the position "2" the selector switch ..303 connects battery ±2 to the charger rectifier, and connects the battery ± 1 to the lighting circuit. When the radio communication unit is powered by a.c., the lighting circuit is automatically switched from the storage batteries to the a.c. network because relay -)311 in the distribution cabinet connects the illuminating fransformer T 309 to the van-lighting circuit. The -)311 relay coil which switches the lighting circuit is energized by the -)315 selenium rectifier which is also located in the distribution cabinet and which is supplied by a.c. from the secondary winding of the illuminating transformer T 309 in the distribution cabinet/see fig.3-16/.

When the radio communication unit disconnected from the a.e. power line, the lighting circuit is automatically switched to the storage batteries, since the -)311 relay coil is then without current and its x contacts switch the lighting circuit from the secondary of the T 309 transformer to one of the storage batteries.

Two side wall windows with double lowering window frames and one door window serve for daylight illumination of the van.

To prevent detection of the radio van at night the window are covered by window panels with door interlock switches which close the "_____"/"lighting interlocking"/ circuit.

The "_____/"lighting interlocking"/toggle switch/..330-6/, which shunts the lighting circuit must be set into the "BK.."//"on".position.

In this case, whenever a window is uncovered, or the door is opened, the van lights are turned off. In cases when it is not necessary to block the lighting, the toggle switch "_____ _____" / "lighting interlocking"/ is set to the "_____"./"off"/position.

NO FOREIGN DISSEM
Declassified in Part - Sanitized Copy Approved for Release 2013/10/18 : CIA-RDP80T00246A071100330001-5

Declassified in Part - Sanitized Copy Approved for Release 2013/10/18 : CIA-RDP80T00246A071100330001-5
NO FOREIGN DISSEM

50X1-HUM

Note:

The cable of the telescopic antenna tower red light, which is used in some instances, is plugged into the 26 V"/..331/ receptacle on the panel of the cable box section.

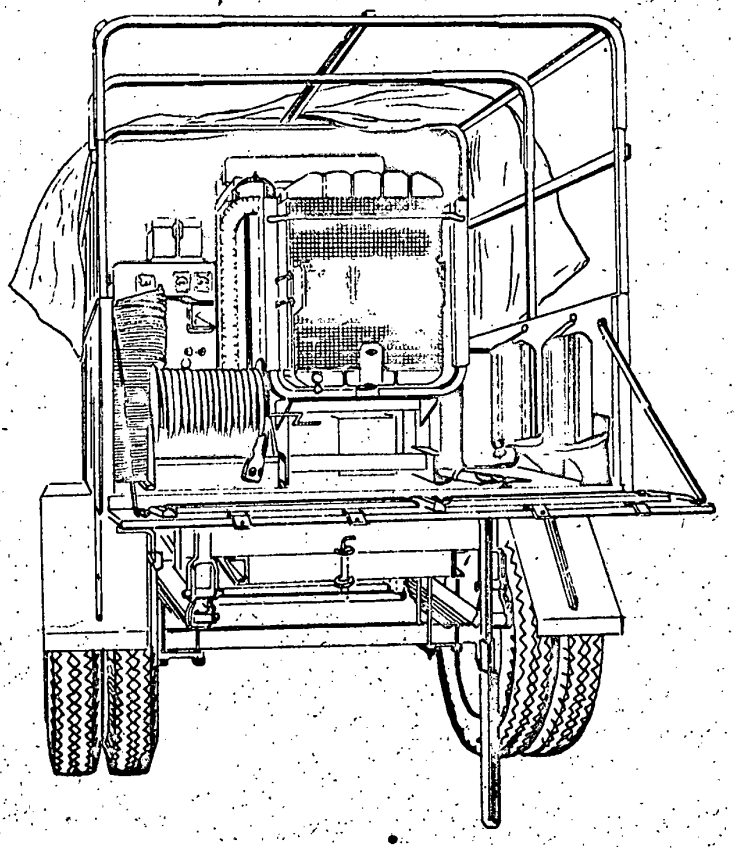

Fig.7 - 2. Location of equipment and components in the radio van.

8 - 2. HEATING.

The van body is heated by a wood burning stove with a removable water container located in the corner to the left of the door. Under the oven is a storage for wood. Before firing

Declassified in Part - Sanitized Copy Approved for Release 2013/10/18 : CIA-RDP80T00246A071100330001-5

Declassified in Part - Sanitized Copy Approved for Release 2013/10/18 : CIA-RDP80T00246A071100330001-5
NO FOREIGN DISSEM

50X1-HUM

the stove it is necessary to remove the extinguishing cover which during transportation is fastened in the bin. and place the smoke pipe outside of the van.

It is not permitted to fire the stove before filling the container with water.

It is not advisable to heat the stove when the radio communication unit is in operation and with the ventillator in the wall of the van operating, since the reversed air draft will cause the smoke from the oven to enter the radio van body.

A type O-) -1,5 3-phase a.c. electric heater is a part of the radio communication unit equipment. The heater is equipped with a ventillator driven by a tyne ..T - 95/M 331% three phase a.c. induction motor.

The circuit diagram of the heater is given in fig.8 - 1. As may be seen from the diagram, the electric heater elements /R 330/cannot be energized before starting the el.ventilator motor M 331. The heater circuit includes two 3-phase circuit breakers ..335 - 1 and ..331 - 2 connected in series. The first circuit breaker/..335/1/ controls the motor and blocks the second circuit breaker/..335 - 2/ which controls the heater elements.

The heater is protected by 3 phase B.393 mounted on the front panel of the distribution cabinet.

When the mobile power plant is in use, of when the radio communication unit is supplied from an external 220/380 V.power line, the van is heated by the electric heater, which is transported in the base of the desk. The heater must be removed from the base of the desk, placed anywhere in the van and its cable must be plugged into the receptable on the right hand side wall of the van behind the transmitter rack after the power line has been connected.

SECRET
NO FOREIGN DISSEM
Declassified in Part - Sanitized Copy Approved for Release 2013/10/18 : CIA-RDP80T00246A071100330001-5

Declassified in Part - Sanitized Copy Approved for Release 2013/10/18 : CIA-RDP80T00246A071100330001-5
NO FOREIGN DISSEM

50X1-HUM

In cold weather it is possible to heat the van by utilizing the heat generated by the operating radio communication unit apparatus. In this case the ventilating opening in the cable box section above the driver's cab must closed by lowering the window.

When the warm air enamating from the BCP-6 rectifier rack cannot exhaust to the outside, but remains also the electric heater.

8 - 3. Ventilation.

The van is ventilated by a type T-57/M 330/ al. 3 - phase- a.c. induction motor ventilator located in the felt hand side wall of the van. The circuit diagram is given by fig. 8 - 1.

Before starting the ventilator M.330 the ventilator opening cover must be uncovered by lowering the handle.

A red arrow is marked on the ventilator. The direction of rotation of the ventilator motor must agree with the arrow; should this not be the case, then it is necessary to change the direction of rotation by means of the phase reversing switch in the cable compartement.

During operation of the radio communication unit the van also ventilated by the ventilator in the rectifier BCP - 6 rack.

SECRET
NO FOREIGN DISSEM
Declassified in Part - Sanitized Copy Approved for Release 2013/10/18 : CIA-RDP80T00246A071100330001-5

Declassified in Part - Sanitized Copy Approved for Release 2013/10/18 : CIA-RDP80T00246A071100330001-5
NO FOREIGN DISSEM

50X1-HUM

PART II.

INSTRUCTIONS FOR THE USE OF THE RADIO COMMUNICATION UNIT

PAC - YKB.

Chapter 9.

Setting up and preparing the radio communication unit for operation.

This chapter covers the folowing: selection of the sight, sequence of setting up the radio communication unit and power plant, setting up of the antenna tower and preparation of the equipment for operation.

ATTENTION !

Some components are sealed for transportation and these seals must be removed during the preparation of the rdaio communication unit for operation.

9 - 1. Sight selection and laying out of the radio communication unit.

The radio communication unit should be located in an open space, as far as possible. For best efficiency, set up the radio communication unit on hill-tops or plateaux.

When setting up in a forrest, it is necessary to choose thin woods with trees not taller than the extended telescopic tower i.e. 10 to 12 meters tall. The radio communication unit should not to be set up near tall buildings, hangars, high tension lines, or in the proximity of other buildings.

It is particularly necessary to make sure that no

SECRET
NO FOREIGN DISSEM
Declassified in Part - Sanitized Copy Approved for Release 2013/10/18 : CIA-RDP80T00246A071100330001-5

Declassified in Part - Sanitized Copy Approved for Release 2013/10/18 : CIA-RDP80T00246A071100330001-5

50X1-HUM

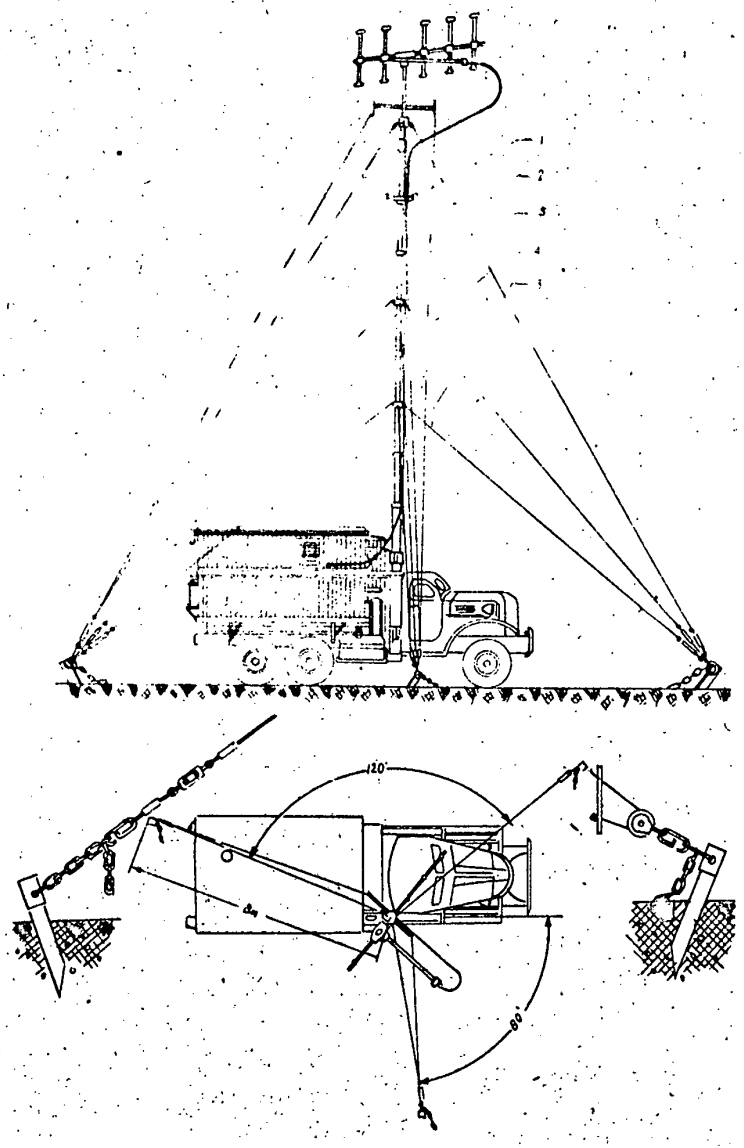

Fig. 9 ♦ 1. Layout of the radio communication unit with the direction antenna.

1.- Signaling apparatus, 2 - anchoring cable; 3- steel guy cable for the third tower section; 5- steel guy cable for the fourth section.

Declassified in Part - Sanitized Copy Approved for Release 2013/10/18 : CIA-RDP80T00246A071100330001-5

Declassified in Part - Sanitized Copy Approved for Release 2013/10/18 : CIA-RDP80T00246A071100330001-5
NO FOREIGN DISSEM

50X1-HUM

greater hills are near the radio commu ication unit in the direction of the radio communication beam which would hide direct visibility. It is necessary to make sure that in the vicinity are no interfering sources such as radio stations with greater power output, radio locators, internal combustion engines without engx ignition noise suppressors, X - ray apparatus, telegraph lines etc.

When the radio communication unit is powered by its own electric power-plant it is necessary to select a sight with two flat spaces, because the electric power plant must be located at least 50 to 55 meters from the radio-van in order to reduce acoustic and electric x interference. When the radio x communication unit is powered from an a.c.power line, the location of the transmitter is given by the length of the supply cables which are available in the radio communication unit for power connections of the radio van. In all instances, however sufficiently flat dights must be selected since the antenna tower must be absolutely plumb and the electric power plant horizontal.

In the selected sights are not sufficiently flat, it is necessary to level the ground under the wheels of the van and to drive in the anchor pags of the tower guy x cables deeper.

The floor space required by the laid out radio communication unit is 15 x 15 meters.

9 - 2. Setting-up and preparing the electric power plant for operation.

When setting up the el.power plant it is necessary to insure that the engine driven generator is leveled, then to lay the power and signaling cables, to earth the engine driven generator, to prepare the engine for starting and to warm up the engine before power is delivered to the radio van.

It is prohibited to lay the power cable between the electric power plant and the radio x van on wet ground or on snow.

NO FOREIGN DISSEM
Declassified in Part - Sanitized Copy Approved for Release 2013/10/18 : CIA-RDP80T00246A071100330001-5

Declassified in Part - Sanitized Copy Approved for Release 2013/10/18 : CIA-RDP80T00246A071100330001-5

It is recommended to lay the cable on blocks of wood or on stands which can be prepared by the attendants /men/.

The preparation of the engine driven generator for power delivery to the radio communication unit must be performed exactly accroding to instructions for the use of the el.power plant ..C - 15/8. Before delivering power to the radio communication unit, the engine must be warmed up. The time required for warming up the engine depends on the ambient temperature.

Remote control/ from the radio van/ of starting and stopping of the power plant engine is possible only when the toggle switch "_____"/"ignition"/ on the control board of the motor is set to the "_____"/"off"/position. In that case the engine starting and stopping is performed by pressing the push buttons "_____"/"start"/ and "_____"/"stop"/

It is strictly prohibited to start the cold engine from the central control unit C..Y.

The power plant trailer is hauled to the selected level plane by means of the radio van.

The attendants perform the shunting of the trailer on the level plane.

After setting up the trailer on the selected spot the rear support is lowered, the rear side-board of the trailer is lowered and a step ladder is set up. It is strictly prohibited to enter the rear part of the trailer if the support has not been lowered, in order ot prevent upsetting the trailer.

Then the following equipment is taken from the trailer: the trench tools/spade, crowbar and axe/ used for setting up of the trailer in the desired position, the cable reels, the fuel and oil cans, the grounding rod with its wire, and other components.

Declassified in Part - Sanitized Copy Approved for Release 2013/10/18 : CIA-RDP80T00246A071100330001-5

Declassified in Part - Sanitized Copy Approved for Release 2013/10/18 : CIA-RDP80T00246A071100330001-5
NO FOREIGN DISSEM

50X1-HUM

The grounding wire is connected to the trailer chassis rear binding post and the grounding rod is driven into the ground.

9 - 3. Laying out of the radio communication unit.

The laying out of the radio communication unit is divided up into 3 stages, namely :

1./setting up of the anchoring pegs of the antenna tower guy cables;

2./ setting up of the radio van ;

3./ assembly of the antenna tower.

The listed sequence is of use only when the radio communication unit is laid out without removing the telescopic tower from the chassis of the van. In other instances the 1st. and 3rd. phases are combined and the 2nd. is performed simultaneously or in advance.

1./ Laying out and driving in the guy cables pegs.

After making a layout of the level plane the achoring pegs for fastening the lower ends of the antenna tower guy cables are driven into the ground, The center of the laid out level plane is determined by the selection of the tower location and it is marked by any convenient means.

The layout of the level plane for the telescopic tower is performed by a 3 men squad by means of a layout triangle whose corners indicate the direction in which the pegs with the guy cables will be driven in. The first man of the squad takes a peg with an attached fork and steps into the center while the other lay out the cables. The 2nd.member of the squad assumes such a position that the short side of the triangle forms and angle of 80° with the direction of the selected van position.

Declassified in Part - Sanitized Copy Approved for Release 2013/10/18 : CIA-RDP80T00246A071100330001-5

Declassified in Part - Sanitized Copy Approved for Release 2013/10/18 : CIA-RDP80T00246A071100330001-5
NO FOREIGN DISSEM

50X1-HUM

After making the ground, the 3rd. member of the squad goes to the side opposits to the 1st.member of the squad and mark the ground for the 3rd.guy cable peg. If the telescopic tower is to be set up on the ground, it is not necessary to maintain the angle of 80°.

The pegs are driven into the ground by a mallot at an angle os approximately 20° to a vertical line away from the center/see fig. 9-1/.

The pegs and mallots are transported in a box located crosswise under the body and the layout triangle is transported in the cable box above the drivers cabin/ in the bag ±1/.

2. Setting up of the radio van.

The location for setting up of the radio van is given by the location of the antenna tower on the level plane or by the length of antenna feeder cables or by the necessity of setting up the radio-van in a given direction so that the antenna tower is set up in a guaranteed vertical plane and will be located in the center of the laid out level plane/see fig.9-1/, The van set up on the flat plane, is earthed by means of a grounding rod and grounding wire. The grounding rod is driven into the ground and the grounding wire is connected to the binding post located on the radio-van frame near the right rear fender.

3. Raising of the telescopic tower with the disk and cone type antenna.

The telescopic tower is raised in the middle of the laid out level plane. When the tower is raised on the ground, the tower base plate is placed in the center of the level plane and the tower is fixed vertically by means of the 1st.section/ of the telescopic tower/ guy cables.

SECRET
NO FOREIGN DISSEM
Declassified in Part - Sanitized Copy Approved for Release 2013/10/18 : CIA-RDP80T00246A071100330001-5

Declassified in Part - Sanitized Copy Approved for Release 2013/10/18 : CIA-RDP80T00246A071100330001-5
NO FOREIGN DISSEM

50X1-HUM

The guy cables must be sufficiently streched by turning the turnbuckles.

"hen the tower is raise on the radio van, the guy cables of the first tower section are not used.

Then a holder is placed in the upper section of the tower. The antenna feeder cable is attached to the disk and cone type radiator.with the conical part opened and disk assembled to it/. the radiator is fastened with nuts /wing-nuts/to the holder and placed on the rod. The dereeler with the antenna feeder cable is placed near the base of the tower.

The signal equipment is placed and fastened by a screw to the ring bracket of the 8th.tower section and its cable together with/ the antenna feeder cable passes through eyelets on the tower sections, the signal twin-conductor cable fork type dereeler is placed next to the antenna cable dereeler.

The carabine clips of the guy cable are fastened to rings on the respective tower section brackets. The guy cables of each tower section are streched in the direction of the anchoring pegs and the hookd of the other end of the guy cables are hooked to the chains of the pegs.

The above mentioned antenne tower components are stored in the radio van as follows.

The cone and disk radiator, the antenna feeder cable, the rod, the holder and the base of the tower.for setting up on the ground/are stored in the chest seat.

The signaling device and guy cables are stored in the cables box above the driver's cabin.

4. Raising the antenna and tower.

Five men are reguired to raise the antenna tower. Three of

SECRET
NO FOREIGN DISSEM
Declassified in Part - Sanitized Copy Approved for Release 2013/10/18 : CIA-RDP80T00246A071100330001-5

Declassified in Part - Sanitized Copy Approved for Release 2013/10/18 : CIA-RDP80T00246A071100330001-5
NO FOREIGN DISSEM

50X1-HUM

them are stationed at the pegs and grasp the guy cables of the 3rd.and 4th.sections, the fourth man is stationed at the handle of the raising mechanism/winch/ and the fifth man acts as the squad leader and assumes such a position that a straight line drawn between him and the tower would be at right angles to the wind direction.

During the raising of the power, in order to maintain its stability, the tension of the guy cables of the 3rd.and 4th. sections are equalized by the van at the anchoring pegs and as the tower goes up the guy cables must be gradually loosened and thus fix the tower accurately in the vertical plane.

During strong winds the squad leader must carefully follow the raising of the tower, to prevent the tower from ~~tilting~~ tilting, and must tell the men which way the tower tilts and the men must tension the appropriate guy cables.

The raising of the tower is stopped as soon as the second red ring/marker.appears on the lower section of the tower.

It is strictly forbidden to raise the tower without the antenna or to raise the tower above the second red ring/marker/.

As soon as the tower is raised the tension of the guy cables of aal ~~xx~~ tower sections must be equalized. The hooks of the guy cables are attached.in advance to the regulating chain links on the anchoring pegs, and the guy cables are firmly tensioned by turning the turnbuckle.

The tower is thus set up accurately vertically without bending.

5. Setting up the tower with the directional antenna.

Before setting up the directional radio communication unit antenna it is necessary to remove the holder with the

SECRET
NO FOREIGN DISSEM
Declassified in Part - Sanitized Copy Approved for Release 2013/10/18 : CIA-RDP80T00246A071100330001-5

Declassified in Part - Sanitized Copy Approved for Release 2013/10/18 : CIA-RDP80T00246A071100330001-5
NO FOREIGN DISSEM

50X1-HUM

rotating mechanism, the symetrization unit and the feeder cable from the chest seat and the board with the backbone and radiators from the nox under the nody of the van.

The assembly of the antenna must be performed in the follo wing order:

1./ Take the holder with rotating mechanism and x fasten to it the end brackets for fastening ~~of~~ of the guy cables.

2./ Connect the director backwbone and the reflector backbone to the coupling bracket.

Do not remove the cap of the symetrization unit.

3/ Tighten the directors and reflector backbones in the coupling bracket.

4./ Assemble the directors and reflectors on the backbone in such a way, that the numbers marked on the directors will correspond to the numbers on the back bones.

Place the assembled antenna on the tower and fasten the holders.after the antenna has been set into the tower/by screwing the bracket to the holder.

Then connect the feeder connector to the symetrazitaion unit and fasten the feeder cable to the antenna clamp and thread the cable through the eyelets of the tower sections. Fasten the guy cables to the tube of the rotating equipment. Tune the antenna to the desired frequency by sliding the radiators on the backbone until the right-angle cut out in the radiator brackets reaches the graduations marked on the backbone. Adjust the reguired length of the radiators by adjusting the end of the tube to the corresponding graduation of the scale on the adjustable plugs.

Remove cap from the symetrization unit, unscrew the three

SECRET
NO FOREIGN DISSEM
Declassified in Part - Sanitized Copy Approved for Release 2013/10/18 : CIA-RDP80T00246A071100330001-5

Declassified in Part - Sanitized Copy Approved for Release 2013/10/18 : CIA-RDP80T00246A071100330001-5
NO FOREIGN DISSEM

50X1-HUM

screws and adjust the annular ring inside the symetrization unit to the graduations corresponding to the tuning of the desired frequency.

After tuning the antenna the signaling equipment is fastened to the telescopic tower and only then the antenna may be raised.

During the raising operation of the tower with the directional antennag the same rules must be followed as in raising tower with the cone and disk type antenna.

The raised antenna must be directed in such a way that the directors will be in the direction of the other communication station and the tower must be fastened by special guy cables to pegs or local objects. The guy cable tensions is regulated manually.

6. Setting up of the radio comm.unit when powered from an external a.c. power line.

When the r.c.u. is not powered by its own electric powerplant, but is powered from external a.c. 3-phase power line, the r.c.u. must be located at such a distance from the power line that the power cable sections which are a part of the auxiliary equipment will suffice, i.e. 140 meters max.

The sequence of setting up of the r.c.u. is as follows:

1./ A level plane is chosen,

2./ The power cable is laid and one of its ends is connected to the appropriate radio van el.panel and the other and to the utility pole panel.

3./ The utility pole panel switch is turned to the"_____" /"off"/ position and then the panel is connected to the power line by putting on rubber gloves, climbing up the pole and connecting the three utility pole panel cables to the 3 conductors of the 3-phase power line.

r.c.u. = radio communication unit.

SECRET
NO FOREIGN DISSEM
Declassified in Part - Sanitized Copy Approved for Release 2013/10/18 : CIA-RDP80T00246A071100330001-5

Declassified in Part - Sanitized Copy Approved for Release 2013/10/18 : CIA-RDP80T00246A071100330001-5
NO FOREIGN DISSEM

50X1-HUM

4./ Then the switch on the utility pole panel is set to the "BK.."/"on"/ position,

The rules for laying of the power cables wire given above under paragraph 9 - 2.

The power cable used for utility pole to the radio van connection consists of three 50 meter sections. At the radio van a 0,3 meter extention cable is used for connecting the power cable to the three terminals on the board of the cable box section above the driver's cab and, at the pole, the other end is plugged directly into the utility pole panel receptacle. The 0,3 meter extention cable has on one end three conductors with terminals and on the other end it has a three contact cylindrical bayonet connector. The 0,3 meter extention cable box and the 50 m cable sections are stored in the trailer, while the rubber gloves are stored in the radio van cabinet drawer 3.

9 - 4. Preparing of the radio communication unit for operation.

1./ Remove the covers from the apparatus,

2./ Open the ventilating opening in the cable box/above the driver's cab/ to permit the escape of warm air from the rectifier ECP - 6 by uncovering the cover.

3./ Set the selector switch in the rear right hand corner of the ECP - 6 rectifier block 5 to the "380 b"/380 volt/or "220 b"/"220 volt"/ position according to the available voltage.

4./ Set the "_____"/"higher-lower-voltage"/ selector switch to position "3".

5./ Set the three emergency switches to the "OTK.."/"off"/ position.

Declassified in Part - Sanitized Copy Approved for Release 2013/10/18 : CIA-RDP80T00246A071100330001-5

Declassified in Part - Sanitized Copy Approved for Release 2013/10/18 : CIA-RDP80T00246A071100330001-5
NO FOREIGN DISSEM

50X1-HUM

6./ Set the "CFTb - a "PE..aT"/ / "power line - power plant"/ selector switch to the power line position.

7./ Check the voltage of all three phases with the voltmeter and selector switch on the BCP - 6 rectifier block 5.

8./ Adjust the autotransormer input voltage to 215 to 225 volt by means of the "_____" "higher-lower voltage"/ selector switch.

9./ Set the "_____"/"radio communication unit supply". switch on the BCP - 66 rectifier block 4 to the "BK.."/"on"/ position.
The pilot lamp "CFTb"/"power line"/ will light on the BCP-66 rectifier block and two pilot lamps onthe central control unit 4 ....Y signal the positions of the "_____" /"control units"/ and "_____"/"mode of communication"/ selector switches will light up.

10/. Set the "_____"/"battery charging"/ selector switch to position"2".-The battery must be fully charged before the radio communication unit is in operating order. The battery voltage is checked by the charging rectifier voltmeter when connected for 26 V operation by pressing the push button on the charging rectifier.

If a discharged battery is used, a failure may occur during a line voltage drop and the electric motor in the automatic tuning equipment of the first transmitter stage may get damaged.

Remove the covers from all units/with the exception of the remote control unit elements/. Connect the external power line to the three binding posts on the panel in the cable box section and connect the power cable of the radio communication unit power plant to the cylindrical connector on the same panel. For simplification it is possible to make both connections simultaneously. It is then possible to select the supply spurce by the "_____"/"power-line-

SECRET
NO FOREIGN DISSEM
Declassified in Part - Sanitized Copy Approved for Release 2013/10/18 : CIA-RDP80T00246A071100330001-5

Declassified in Part - Sanitized Copy Approved for Release 2013/10/18 : CIA-RDP80T00246A071100330001-5
NO FOREIGN DISSEM

50X1-HUM

power-plant"/ selector switch. It is absolutely necessary to switch the "220-380"/"a220 V - 380 V"/ selector switch in the BCP-6-..rectifier block ±5 to the available voltage.

Besides this, the storage battery ±2, located in the chest seat, and consisting of the same number of cells, may be connected to the 26 V charger rectifier as a buffer by switching the "_____"/"battery charging"/ selector switch on the distributing cabinet to the position "±1".

The correct phase sequence of the supply voltage is determined by the direction of rotation of the ventilator/on the left hand side wall of the van/blades, which must be in agreement with the arrow on the ventilator frame.

Should the blades rotate in the opposite direction, the flat power cable plug in the power plant must be disconnected, reversed by 180' and reconnected, or the power must be switched off en the utility pole panel and two conductors fastened to the binding posts "_____380 V"/"380 V power line"/ in the cable box section must be reversed.

9-5. Setting up the radio communication unit.

1. Safety measures.

In order to prevent any damage to the equipment or injury to the personnel from the high voltage, the following rules must be maintained.

1. Make the selection control of the units of the r.c.u. only with the r.c.u. power turned off.

2. Tune the transmitter only with reduced power output/10/40 %, complete tuning at full power/10 %/.

Do not touch the electrodes of the transmitter evacuum tubes

SECRET
NO FOREIGN DISSEM
Declassified in Part - Sanitized Copy Approved for Release 2013/10/18 : CIA-RDP80T00246A071100330001-5

Declassified in Part - Sanitized Copy Approved for Release 2013/10/18 : CIA-RDP80T00246A071100330001-5
NO FOREIGN DISSEM

50X1-HUM

or its high frequency circuits.

4./ Change fuses and vacuum tubes only with the "_____ _____"/"power line - power plant"/ selector switch on the rectifier BCP - 6 .. panel of the block 5 in the "off" position.

5./ The ...-7.. vacuum tubes must be inserted into the 5 th. and 6th. stage holders perfectly vertically. The extentions/bosses/of the anode radiators of these vacuum tubes must be inserted into the holder openings and the door of these holders.

If this rule is not maintained, the contact springs of the meeter contact of the vacuum tube socket, used for the cathode pin of the vacuum tube will weaken and the heat transfer from the cathode lead of the vacuum tube ...-7.. and the vacuum tube socket will be reduced.

6./ As soon as any irregularities appear in the output power section or in the receiver or elsewhere the supply voltage must be turned off without delay and the faults must be removed.

7./ Make sure that all the fuse are of the required current rating.

8./ Never operate the transmitter when the air-cooling system of the type BCP - 6 rectifier or of the transmitter are not functioning.

9./ The generator and x converter commutators and collectors must be cleaned during the operation of the radio communication unit, when cleaning the commutator or collector rotate the armature by hand.

10./ Never do any maintenance work on the generator or engine during the operation of the electric power plant.

11./ Do not touch the transmitter high frequency circuits or the antenna feeder-serious burns might result.

12./ It is forbidden to pour the fuel/gasoline/and to fill

SECRET
NO FOREIGN DISSEM
Declassified in Part - Sanitized Copy Approved for Release 2013/10/18 : CIA-RDP80T00246A071100330001-5

Declassified in Part - Sanitized Copy Approved for Release 2013/10/18 : CIA-RDP80T00246A071100330001-5
NO FOREIGN DISSEM

the cans while the electric power plant operating.

13./ Never connect the power cable terminals to the power line, reverse phases, connect terminal boards or perform other similar high tension work without rubber gloves.

2. Preparation of the transmitter for operation.

The transmitter is prepared for service with the following sequence:

1./ Remove the upper front door of the transmitter.

2./ Insert the BCP-6.. rectifier block fully into the rectifier rack as well as the first and second stages of the transmitter and the transmitter vacuum tube filament stabilizing transformer blocks by tightening the screws for fastening the blocks and stages in the racks.

3./ Connect the two TA..-43 telephone sets to the telephone receptacles of the electric power plant and the remote control unit circuits.

4./ Connect the antenna and main receiver feeders to the reception-transmission relay section.

5./ Connect the headphones, carbon microphone or throat microphone to the appropriate jacks on the centrak control unit ...Y.

6./ Check whether the automatic tuning knobs are locked/ whenever the r.c.u. is turned on and during the selection of communication channels the tuning knobs must be locked/.

7./Select four quartz crystals required for the communication and set them into the appropriate crystal holders under the "_____"/"crystal"/ cover in the first transmitter stage.

The TA..-43 telephone sets are transported in the seat cheat and they are placed on the radio operator's desk and they are plugged into the receptacle on the front wall of the van.

(r.c.u.= radio communication unit).

Declassified in Part - Sanitized Copy Approved for Release 2013/10/18 : CIA-RDP80T00246A071100330001-5

Declassified in Part - Sanitized Copy Approved for Release 2013/10/18 : CIA-RDP80T00246A071100330001-5
NO FOREIGN DISSEM

The quartz crystals are stored in the cabinet drawer ±3, the head-phones, carbon microphone and throat microphone in drawer ± 1, and the feeder of the main receiver in drawer ±2

The doors on the side walls of the transmitter cabinet may be removed for better cooling of the transmitter, but in such a case the door switches must ve short-circuited with a piece of wire. In such cases it is necessary to be particularly on the watchout that none of the attendants touches any part of the high tension circuit.

3./ Connecting the r.c.u.

1. Setting of the central control unit ....Y selector switches.

1. Set the "_____"/"control units"/ selector switch to the "_____"/"central control unit"/position.

2. Set the _____""receiver"/ selector switch to be the "_____"/"central control unit"/position.

3./ Set the "_____"/"mode of communication"/ selector switch to the "C"/"simplex"/position.

4./ Set the "_____"/"power"/toggle switch to the "25%" position.

5./ Set the "_____"/"high voltage".toggle switch on the first transmitter section to the "BK..."/"on"/position.

6./ Connect the r.c.u. by pressing the "P-....."/ "radio comm.unit"/ push button on the central control panel....Y.

When the r.c.u. is connected, the transmitter and BCP-6.. rectifier section ±3 cooling system electric motors are turned on. A pilot lamp with the inscription "_____"/"filaments"/ on the BCP-6..rectifier block .... lights up.

(r.c.u.- radio communication unit.)

SECRET
NO FOREIGN DISSEM
Declassified in Part - Sanitized Copy Approved for Release 2013/10/18 : CIA-RDP80T00246A071100330001-5

Declassified in Part - Sanitized Copy Approved for Release 2013/10/18 : CIA-RDP80T00246A071100330001-5
NO FOREIGN DISSEM

50X1-HUM

Two minutes after pressing the push button the electromechanical "_____"/"time delay"/ automat in the transmitter rack energizes the 26 V high voltage contactor /-)302/ coil in the BCP-6.. rectifier. The contactor energizes all high voltage rectifiers and a red/the middle one/ pilot lamp with the inscription"_____"/"high voltage"/ on the BCP-6..rectifier block ± 3 panel lights up.

Should the pilot lamp "_____"/"filaments"/ on the BCP-rectifier block ±3 alternately light up and shut off after connecting of the r.c.u., this will indicate that the a.c.phase sequence is incorrectly connected and that it must be immediately reconnected by interchanging two phase conductors or the utility pole or on the BCP-6.. rectifier cover terminal board 311/these conductors are connected to terminals 62 and 63/.

4. Connect the required communication channel by pressing the respective push button of the communication channel selector switch and proceed to tune the transmitter.

To reduce the number of failures of the r.c.u. transmitter caused by failures of the ....-75 vacuum tubes in the second and in the output power amplifiers/the 5th.and 6th.stages/ it is necessary to operate the r.c.u. after replacing the vacuum tubes in these stages in the following way:

1./Set the "_____"/"high voltage"/ toggle switch of the first transmitter section to the "_____"/"off"/positions.

2./Set the "_____"/"power"/toggle switch on the central control panel ..... to the "25 %" position.

3./ Connect the .r.c.u. by pressing the "_____/"radio communication unit"/ push button on the central control panel ....Y.

Declassified in Part - Sanitized Copy Approved for Release 2013/10/18 : CIA-RDP80T00246A071100330001-5

Declassified in Part - Sanitized Copy Approved for Release 2013/10/18 : CIA-RDP80T00246A071100330001-5
NO FOREIGN DISSEM

4./ After 1 - 1/2 hours switch the "_____"/"high voltage"/ toggle switch of the first transmitter section to the "_____"/ "on"/ position.

5./ After 1 hour of transmitter operation at reduced power switch the "_____"/"power"/toggle switch on the central control panel .....Y to the "100 %" position.

As a result of this sequence, the transmitter ~~x~~ vacuum tube filaments will have been preheated for 1-1/2 hours before these vacuum tubes will work for one hour at reduced power. This insures hardening of the ...-7.. vacuum tubes and reduces failures during service.

Besides this, it is recommended to periodically/every 15 days/change the ...-7.. vacuum tubes in the 5th. and 6th. transmitter stages and to replace them by the spare ..-7-.. vacuum tubes. After every vacuum tube replacement repeat the"hardening" according to the above specification.

9 - 6. Transmitter tuning and modulation level adjustment.

1. Tuning of the transmitter high frequency stages.

The "_____"/"power"/ toggle switch on the central control panel .....Y must be in the "25%" position while tuning all of the transmitter high frequency stages.

During the tuning of the transmitter high frequency stages all of the automatic tuning locking knobs must be loosened.

The tuning of the first four stages is performed with the aid of the ...101 meter located on the left hand side of the lower row of panel instruments. The meter selector switch ..101 for tuning of the first four stages is located to the left of this meter. Above the meter and selector switch ..101 is the

Declassified in Part - Sanitized Copy Approved for Release 2013/10/18 : CIA-RDP80T00246A071100330001-5

Declassified in Part - Sanitized Copy Approved for Release 2013/10/18 : CIA-RDP80T00246A071100330001-5
NO FOREIGN DISSEM

50X1-HUM

inscription" _____"1, 2, 3, 4,"_____"/"tuning of the 1st, 2nd, and 4th.stages"/.

The equipment is tuned for the maximum meter deflection. The selector-switch positions "1, 2, 3, and "4" correspond to the numbers of tuned stages, i.e. with the selector switch in the position "1" the crystal oscillator-doubler/the 1st.stage/ is tuned, in the position "2" the first frequency tripler/the 2nd. stage/ is tuned. etc.

The tuning meter induction of these stages/with the exception of the 4th/are independent of the transmitter power level /wether the transmitter works at reduced power 10 to 40% or at full power 100%.

The tuning of the second power amplifier/the 5th.stage/is performed with the aid of the meter.....105". /"tuning of the 5th.stage"/ which is located in the upper left part of the instrument panel. The tuning meter of the 5th.stage indicates the average value of the sum of the grid currents of the 4 tubes of the 6th.stage.

The tuning of the output power amplifier/the 6th.stage/ is performed with the aid of the_____"/"6th.stage tuning".which is the second from the left in the upper instrument panel and which indicates the load current of the main modulation monitor detector electrically connected to the transmitter antenna feeder system.

Adjust the meter needle to the green line on the scale by means of the_____/"modulation monitor coupling adjustment"/ and then switch to 100% power, whereby the needle must point to the red line of the scale.

After tuning all stages set the _____/"power"/ toggle switch on the central control panel Y to the "100% position and complete the tuning of all six stages.

With the aid of the_____"/"6th.and 7th.-

Declassified in Part - Sanitized Copy Approved for Release 2013/10/18 : CIA-RDP80T00246A071100330001-5

Declassified in Part - Sanitized Copy Approved for Release 2013/10/18 : CIA-RDP80T00246A071100330001-5

7th stage symmetry"/selector switch and with the aid of the ..102 meter determine whether if the 5th.and 6th.stage vacuum currents are normal, i.e. whether the neddle deflection is within the colored range of the instrument scale, the needle should be within the blue range for the 5th.stage vacuum tube currents, whefoas for the 6th.stage the pointer should be within the red range.

Under normal operating conditions and with proper tuning of the transmitter, the needles of the meters should be within the colored ranges of the scales. The following sequence must be followed in tuning of the stages and fixing the automatic transmitter tuning:

1./ Turning of the looking knobs to the left, all tuning knobs to the autotune heads are loosened.

2./ The transmitter preliminary tuning is performed by smoothly turning the knobs/start with the first one/. During preliminary tu ing of the circuits it is possible to turn the knobs in both directions in order to obtain maximum meter deflections.

Declassified in Part - Sanitized Copy Approved for Release 2013/10/18 : CIA-RDP80T00246A071100330001-5

Declassified in Part - Sanitized Copy Approved for Release 2013/10/18 : CIA-RDP80T00246A071100330001-5
NO FOREIGN DISSEM

50X1-HUM

After determining that the tuning has been properly performed (judging by the meter readings and positions of knobs in relation to the orientation lines marked on the scales)the tuning meters of all stages are obeserved and then the final tuning of the transmitter is performed and the automatic tuning is locked.

During the final tuning of the transmitter it is necessary to turn the knobs in succession to the left by 20° to 30° and then slowly returning them to the right to the position indicated during the preliminary tuning by the meedle of respective meters. The knobs are locked in positions by turning the locking knobs to the right.

Turn the knobs in succession to left within the range of the free motion and then return them to the right up to the stop; if during this operation the turning ~~on~~ meter reading do not change, the tuning may be considered as completed. In case that this dheck of any of the circuit tuning knobs does not rens the transmitter tuning, then it is necessary to retune such a circuit.

The final checking of the transmitter tuning is performed by automatic retuning of the tuned circuits.

After checking the tuning of one of the communication channels press the selector push button of the next communication channel and the entire tuning process for the new frequency is performed in a similar way as the one described above.

The sequence of tuning the communication channels is immaterial.

After the tuning of all channels it is necessary to once

SECRET
NO FOREIGN DISSEM
Declassified in Part - Sanitized Copy Approved for Release 2013/10/18 : CIA-RDP80T00246A071100330001-5

Declassified in Part - Sanitized Copy Approved for Release 2013/10/18 : CIA-RDP80T00246A071100330001-5
NO FOREIGN DISSEM

more make sure that each channel is properly tuned by checking the tuning of all stages while using the automatic tuning mechanism, since instance might occur when during the tuning of the second channel the first one is detuned, etc.

Transmitter modulation level adjustment.

After tuning the transmitter stages the transmitter modulation must be adjusted using the following sequence of operations.

1) Turn the knobs of the manual modulation level (.....) control counter clockwise up to the stop (adjust for the lowest modulation level value) connect the vacuum tube voltmeter (LB) and with the "_____"("Zero adjustment of the vacuum tube voltmeter") knob adjust its meter to zero on the scale.

2) Turn the modulation level control knobs "_____" clockwise up to the stop.

3) Sound a drawn out "Ah" sound in front of the microphone is loud enough for an input signal voltage of 0,25 V and adjust the modulation level ~~control~~ control knob "_____" for a modulation level of 80 to 90 %; if the modulation level control knob in the extreme right position corresponds to a modulation level greater than 90%, then this operation must be repeated for every communication channel, for otherwise overmodulation might take place and the quality of telephone communication would be compaired.

For telephony communication the transmitter is adjusted by far more accurately at a modulation frequency of 1000 cps. which may be obtained from the type 30-10-5 audio oscillator.

Declassified in Part - Sanitized Copy Approved for Release 2013/10/18 : CIA-RDP80T00246A071100330001-5

Declassified in Part - Sanitized Copy Approved for Release 2013/10/18 : CIA-RDP80T00246A071100330001-5
NO FOREIGN DISSEM

50X1-HUM

The 1000 cps. signal is applied to the input of the audio frequency section of the transmitter over the connecting line, if the audio oscillator output is applied to the microphone amplifier of the remote control unit...../, or directly to the microphone jack of the central control panel..... When the remote control unit ..... and the ..... audio oscillator are in the radio van.

3. Transmitter operation with two I - 7 g vacuum tubes in the output power amplifier (in the 6th,stage).

In some emergency cases when most of the spare..... vacuum tubes are inoperable (the vacuum tubes were damaged while in use in the transmitter power stages) and only 4 to 5 good vacuum tubes remain for use in the second and output transmitter power amplifiers (the 5th. 6th stages) and when it is possible to operate at a reduced transmitter power insures dependable communication over the reguired distance), it is possible to use only two of the ..... vacuum tubes instead of four of them in the transmitter output power amplifier.

With the transmitter operating with only two vacuum tubes in the output power amplifier, only the "1" and "3" or "2" and "4" good vacuum tubes are used.

To preserve the tuning of the output power amplifier, it is necesaary to use two ..... vacuum tubes with burned out filaments in place of the good tubes.

The tuning sequences of the various stages of the high frequency section of the transmitter operating with only two ..... vacuum tubes in the output power amplifier is as follows:

SECRET
NO FOREIGN DISSEM
Declassified in Part - Sanitized Copy Approved for Release 2013/10/18 : CIA-RDP80T00246A071100330001-5

Declassified in Part - Sanitized Copy Approved for Release 2013/10/18 : CIA-RDP80T00246A071100330001-5
NO FOREIGN DISSEM

50X1-HUM

1) The tuning of the various stages of the high frequency section of the transmitter is performed at 25% power (with the "....."(power) toggle switch in the "25%" position) using the same method as described above in section 1. of this paragraph.

2) Before switching the transmitter to "100%"(power) when the toggle switch .....(power), on the central control panel ..... is in the "100%"position) with the transmitter stil operating at 25%" power, datume the second tripler anode circuit (the third stage) by reducing ~~x~~ the maximum current flowing through the good output power amplifier vacuum tube to one half (this current is checked by the M 102 ..... (5th, 6th stage symetry" meter).

3) Switch the transmitter power to 100% and by tuning the second tripler anode circuit adjust for normal maxim currents (100 to 120 ma on the (5th and 6th stage symetry)..... ....."meter of all the output power amplifier vacuum tubes.

The modulation level is adjusted by the usual method according to the instructions of section 2 of this paragraph.

When checking the transmitter modulation level adjust the needle of the M 106 meter (inscribed ..... (6th.stage tuning") by means of the adjustable resistor R.122) (whose knob is inscribed "_____"("modulation monitor coupling adjustment") to the red of green mark on the scale of this meter (the color of the mark depends on the

SECRET
NO FOREIGN DISSEM
Declassified in Part - Sanitized Copy Approved for Release 2013/10/18 : CIA-RDP80T00246A071100330001-5

Declassified in Part - Sanitized Copy Approved for Release 2013/10/18 : CIA-RDP80T00246A071100330001-5
NO FOREIGN DISSEM

transmitter power within the operating frequency range.

When the transmitter output power amplifier (the 6th.stage) operates with two ..... vacuum tubes, the transmitter output within the operating frequency range is reduced to 40-50% of the power available with the transmitter operating with four .....vacuum tubes in the output powers amplifier. The frequency distortion remains practically the same.

When the transmitter operates with two..... vacuum tubes in the output power amplifier it is not necessary to tune the transmitter output with the antenna.

To use only two ..... vacuum tubes instead of four vacuum tubes in the transmitter power amplifier circuit is permitted only temporarily, since the power of the transmitter is thereby reduced.

9-7. Preparing the receivers for operation.

The sequence of operation in preparing the receiver for operation is as follows:

1. Preparing the main receiver.

1) Remove the receiver cover.

2) Take out two T A-4 head phones and insert their plugs into the following jacks: one of the plugs into the jack inscribed "....."(main) and the other one into the jack inscribed "....." ("auxiliary") on the common panel of both receivers (under the receivers) or into one of the jacks on the auxilliary receiver control panel.

3) Connect the antenna feeder connection from the transmitter to the main receiver by connecting the end of the feeder

SECRET
NO FOREIGN DISSEM
Declassified in Part - Sanitized Copy Approved for Release 2013/10/18 : CIA-RDP80T00246A071100330001-5

Declassified in Part - Sanitized Copy Approved for Release 2013/10/18 : CIA-RDP80T00246A071100330001-5
NO FOREIGN DISSEM

cable with the small connector to the connector of the main (lower) receiver. The other feeder cable end connect to the left connector connector of the receive "transmit" relay in the first stage of the transmitter.

4. Remove the cover from the main receiver BC..-2 rectifier and also the covers fron its top and bottom walls and open the ..... on the side walls (near the knob(. During operation this rectifier, as already mentioned previously, must be placed horizontally.

5. Connect the two cable connectors, loading from the common panel of both receivers to the respective connectors of the BC.-2 rectifiers.

6. Set the toggle switches in the rectifier side wall to the "220" and BK.."(on) positions, because the main receiver rectifier remains in the radio van and it is not possible to switch the toggle switch later on.

7. Plug the reguired quartz crystals into the respective receiver jacks.

8. Set the "....." (control units") selector switch on the central control panel ..... tothe "....." ("central x control unit") position.

9. Set the "_____"(receivers) selector switch on the central x control panel ..... to the ..... (xcentral control unit). position.

10. Set the "....."?"mode of communication") selector switch on the central control panel ..... to the "....." ("semi-duplex") position.

11. Set the "....."(Supply) selector switch on the common panel of both receivers to the "....."("a.c.") position.

NO FOREIGN DISSEM
Declassified in Part - Sanitized Copy Approved for Release 2013/10/18 : CIA-RDP80T00246A071100330001-5

Declassified in Part - Sanitized Copy Approved for Release 2013/10/18 : CIA-RDP80T00246A071100330001-5
NO FOREIGN DISSEM

After completing these operations the main receiver is prepared for tuning, as long as it is supplied by alternating current.

18. The switching of the main receiver communication channels is performed simultaneously with the switching of the transmitter channels by means of the channels selector push buttons on the central control panel .....-

If no alternating current is available at the radio communication unit the receiver may be supplied (powered) from the staorages batteries. In this case it is necessary to perform the following operations:

1./ Set the "....."("battery charging") selector switch on the distribution cabinet located under the BC3-1 rectifier charger to the "2" position. It is recommended not to set this selector switch to the "1" position, since three of the 4-HKH-45M storage batteries may be removed from the battery set ±2 and carried away to the remote control unit.....

2./ Set the "....."("supply") selector switch on the panel of the receivers to the "....."("d.c.") position. This causes the converter to start working and the d.c. powered main receiver is prepared for tuning.

If no a.c. is available at the r.c.u. the communication channels of the main receiver cannot be switched by means of the communication channel selector switch on the central control panel .....- In such a case, if it is imperative to switch ~~XXXXXXXXXX~~ communication channels of the main receiver and switch the channels by means of the selector switch on its panel.

r.c.u. - radio communication unit.

SECRET
NO FOREIGN DISSEM
Declassified in Part - Sanitized Copy Approved for Release 2013/10/18 : CIA-RDP80T00246A071100330001-5

Declassified in Part - Sanitized Copy Approved for Release 2013/10/18 : CIA-RDP80T00246A071100330001-5
NO FOREIGN DISSEM

The receiver is wswitched on by means of the "....." /"supply"/ selector switch on the common panel of both receivers in the "....."."off"/ position/the center position/. The antenna feeder connection, which is a component of the radio communication unit enables the possibility of connecting the receiver input ~~xxxxxx~~ directly to the antenna feeder cable of the main communication line, whereby the reception-transmission relay block is left out.

2. Preparing the auxilliary receiver.

1./ Connect the set up antenna of the auxilliary receiver by means of the antenna lead in feeder cable to the auxilliary receiver.

2./ Remove the cover from the BC...-2 rectifier which supplies the auxilliary receiver.

3./ Remove the top .....bottom covers .... open the rectifier side louvers (near the knobs).

4./ Connect the two connectors of the cable coming from the control panel of the auxilliary receiver to the respective connector receptacles on the BC..-2 rectifier.

5./ Set the toggle switch and knob on the side wall of the rectifier to the "220" and "....."/"on"/ position.

6./ Plug the reguired four quartz crystals into the crystal holders of the receivers

7./ Set the "....."/"supply"/ selector switch on the auxilliary receiver control panel to the "....." ("a.c.") position.

If powered by a.c. the auxilliary receiver is now prepared for tuning.

If powered by direct current, the ".l....." ("battery charging") selector switch on the distribution cabinet must be set to the "2" position, whereas the "....."

SECRET
NO FOREIGN DISSEM
Declassified in Part - Sanitized Copy Approved for Release 2013/10/18 : CIA-RDP80T00246A071100330001-5

Declassified in Part - Sanitized Copy Approved for Release 2013/10/18 : CIA-RDP80T00246A071100330001-5
NO FOREIGN DISSEM

50X1-HUM

("power supply") selector switch on the auxilliary receiver control panel must be set to the "....." (d.c.) position, the same way as in the case when the main receiver is powered by d.c.

This starts the converter operating and lights up the pilot lamp on the auxilliary receiver control panel.

The d.c. powered auxilliary receiver is then prepared for tuning.

The receiver is turned off by setting the selector switch on the auxilliary receiver control panel to the "....." ("off") position and the pilot lamp on the panel is simultaneously turned off too.

The main receiver input is connected by means of the feeder cable is stored in radio van cabinet drawer ± 2.

The rectifier used for supplying the main receiver is stored in the radio operators desk; the measuring meter instrument is stored in the cabinet drawer ± 4; and the quartz crystals in drawer ±3. Before connecting the auxilliary receiver antenna on the roof of the radio van and to connect the B.....-2 rectifier which is stored on the floor of the radio van in front of the BCP-.... rectifier rack. When the storage battery set remained completely assembled and is fully with the "....."("battery charging") selector switch on the distribution ("battery charging") selector switch on the distribution cabinet in the "....."position.

SECRET
NO FOREIGN DISSEM
Declassified in Part - Sanitized Copy Approved for Release 2013/10/18 : CIA-RDP80T00246A071100330001-5

Declassified in Part - Sanitized Copy Approved for Release 2013/10/18 : CIA-RDP80T00246A071100330001-5
NO FOREIGN DISSEM

50X1-HUM

9-8. Tuning of the receivers.

Tuning of the receivers is performed with the aid of the measuring unit (Block "N") in the following manner:

1. Tuning of the main receiver.

1. Remove the measuring instrument from the cabinet, open it and take out the cables with the connectors ƒ 101-201 and ƒ296.

2. Connect the measuring instrument cables to the receivers

3. Push the "_____" ("release") push button and after loosening of the lever mechanism unlock the small knobs by turning them about half a turn to the left from the stop. Press the "_____"(Release) push button once more.

4. Connect the first channel by operating the communication channel selector switch on the central control panel.....-

Set the measuring instrument also for the first channel of release all four push buttons, for otherwise the receiver automatic tuning device would function irregularly.

5. Set the meter selector switch on the measuring instrument to the "KB....." ("receiver crystals") position and by turning the first left handside receiver tuning knob adjust for the maximum meter needle deflection.

6. Switch the meter selector switch on the measuring instrument to the "....."("heterodyne") position and by turning the second receiver tuning knob adjust for the maximum meter needle deflection.

7. Tune both knobs according to the maximum of the phones with the "....."("limiter") receiver toggle switch turned off.

8. Repeat the same tuning procedure for all the other communication channels in the sequence 2-3-4 and then by pressing

SECRET
NO FOREIGN DISSEM
Declassified in Part - Sanitized Copy Approved for Release 2013/10/18 : CIA-RDP80T00246A071100330001-5

Declassified in Part - Sanitized Copy Approved for Release 2013/10/18 : CIA-RDP80T00246A071100330001-5
NO FOREIGN DISSEM

the "_____" ("release") push button the lever mechanism is loosened and the receiver tuning knobs are locked on by turning the small tuning knobs to the right against the stop.

Press the "_____" ("release") push button for a second time and check the proper function of the automatic tuning selector by the amount of noise in the phones.

Disconnect the measuring instrument from the receiver and store its cables in the proper compartement.

Cover the communication channel switching mechanism by a cover and also cover the free connectors on the receiver front panel with caps. The receiver is then ready for operation.

For loud-speaker reception the r.c.u. is equipped with a dynamic loudspeaker. The amplifier anode supply is connected simultaneously with the main receiver. The dynamic loudspeaker and amplifier may be turned on or off at the operatorswill by the selector switch either on the amplifier or on the commoh panel of both receivers.

Separate volume controls are on both the amplifier and the central control panel .....- These volume controls regulate the volume of both the dynamic loudspeakers and phones.

2./ Tuning the auxilliary receiver is similar to the tuning of the main receiver and is performed with the same sequence. The only difference is that the main receiver tuning is performed by the communication channel selector switch on the central control panel....., whereas in the auxilliary receiver tuning is performed from the auxilliary receiver control panel, or also directly from the measuring instrument;

NO FOREIGN DISSEM
Declassified in Part - Sanitized Copy Approved for Release 2013/10/18 : CIA-RDP80T00246A071100330001-5

Declassified in Part - Sanitized Copy Approved for Release 2013/10/18 : CIA-RDP80T00246A071100330001-5
NO FOREIGN DISSEM

in the letter case the communication channel selector push-buttons on the auxilliery receiver panel are set to the neutral position (turned off) or the channel number on the auxilliarly receiver control panel must also agree with the channel number on the measuring instrument. If the above instructions are not adhored to, which holds true also for the tuning of the main receiver, the result will be on uninterrupted rotation of the ratchet wheel of the stepping relay of the automatic tuning device.

3.) Testing of the radio communication unit receiver.

To test the receiver sensitivity connect any suitable standard signal generator capable to operate within the receiver frequency range to the Ø 205 connector. Connect the output meter to the Ø 203 connector (to the 8 and 1 pins) and in parallel to it connect the high resistance headphones.

If no standard signal generator is available, elementary tests on the receivers may be performed by means of the measuring instrument on the basis of the hums in the phones.
When testing follow the sequence given in table 9-1.

Table 9 - 1.

Meter readings during the receiver testing by the measuring instrument.

Position of the selector switch.	Meter indication.
Filament voltage - x 1 V	25, 2 ± 0,5 V.
Anode voltage - x 10.V	275 ± 15 V.
Bias voltage - x 5 V.	- 105 ± 10 V.
Total current - x 30 m a	12 - 30 ma
quartz crystals - receiver	tuned for maximum.
heterodyne -	- " -
receiver output 3 m a	10 - 30 ma

Declassified in Part - Sanitized Copy Approved for Release 2013/10/18 : CIA-RDP80T00246A071100330001-5

Declassified in Part - Sanitized Copy Approved for Release 2013/10/18 : CIA-RDP80T00246A071100330001-5
NO FOREIGN DISSEM

50X1-HUM

9 - 9. Final checking and operation of the radio communication unit after tuning.

After completing the tuning of the transmitter and of the receivers it is necessary to completely check the radio communication unit for all modes of communication.

1. Simplex communication.

1. Set the "P....."/"mode of communication"/ selector switch on the central control panel .....to the "C",/"simplex"/ position.

2. Set the "....."."control unit"/ selector switch to the "....."/"central control unit"/ position. Press the "....."/"radio communication unit"/ push button "....." /"on"/ and within 2 minutes, during which the high voltage is connected, check the functioning of the automatic tuning of the transmitter and of the receiver of all the four communication channels, the needles of the meters must be within the colored ranges of the scales when the transmitter operation is normal. The checking is performed by switching the "....." selector switch on the central control board ..... and the " "....."/"symmetry"/ and "....."/"tuning of first four stages"/ selector switches.

4./ Adjust the meter needle of the vacuum tube voltmeter to zero by means of the "....."/"Zero adjustment of the vacuum tube voltmeter"/ knob on the central control panel .....

5./ Check the modulation by plugging the MPY microphone plug into the "M" jack on the central control panel ..... and by pressing the button on the handle of this microphone and calling out a long "Ah" sound into the microphone.

Declassified in Part - Sanitized Copy Approved for Release 2013/10/18 : CIA-RDP80T00246A071100330001-5

Declassified in Part - Sanitized Copy Approved for Release 2013/10/18 : CIA-RDP80T00246A071100330001-5
NO FOREIGN DISSEM

This sound deflects the needle of the meter, which reads the modulator anode vacuum tube current, beyond the colored ranged of the scale.

The tuning meter indication of the 5th will be some what smaller, the ....B vacuum tube voltmeter meter on the central control panel ..... will read the input signal voltage of the transmitter audio frequency section, and the "....." (depth of modulation") meter will read the coefficient of modulation in percentage under the condition that the needle of the 6th stage tuning meter will point to 0,7 (the red mark) on the scale.

By calling out the loud "Ah" sound in front of the microphone, the function of the audio frequency amplifier is checked on the transmitter monitor and the understanding-ability is checked by pluging the T A - 4 headphone plug into the jack "K" on the central control board .....

Check the modulation with the throat microphone by connecting the throat microphone with the cord switch to the central control panel .....(to the "....." (helmet phone") receptacle on the central control panel and calling out a loud "Ah" sound (w with the throat microphone placed on the throat"/.

It is not recommended to check the main receiver with the "....." "mode of communication")selector switch in the "C" ("simplex") position, since the receiver would be blocked by the greater negative bias.

This mode of communication is used for the tuning of the transmitter.

Declassified in Part - Sanitized Copy Approved for Release 2013/10/18 : CIA-RDP80T00246A071100330001-5

Declassified in Part - Sanitized Copy Approved for Release 2013/10/18 : CIA-RDP80T00246A071100330001-5

In this case the auxilliarly receiver with its own antenna may be used for reception.

2. Mechanical semi duplex communication.

To switch over from simplex to semi-duplex commu ication proceed as follows:-

1. Set the "....." ("high voltage") toggle switch to the .....(2off") position.

2. Set the "....."("mode of communication") selector switch on the central control panel ..... to the .....("semi duplex" position, this turns the pilot lamp with the inscription"C" ("simplex") off and light up the "....." ("semi duplex") pilot lamps.

3. Turn off the "....." ("high voltage") toggle switch on the first transmitter section, thereby lighting the pilot lamp signaling which of the commu ication channels is in use.

All the meter needles on the instrument panel of the first section with the axception of the high voltage voltmeter stay at zero. This indicates that the transmitter is blocked, i.e. that the r.c.u. is set for reception and that the reception-transmition relay connected the antenna to the receiver.

The main receiver starts to operate and the dynamic loudspeaker, if connectedm emits a sound (hum).

Press the push button on the handle of the MPX microphone which is plugged into the "M" jack on the central control panel ..... press the push button of the cord switch on the throat microphone which is connected to the ".....f("helmet phone") connector. And the reception-transmission relay connects the antenne to the transmitter, unblocks the transmitter and blocks the receiver.

4/ radio communications unit.

Declassified in Part - Sanitized Copy Approved for Release 2013/10/18 : CIA-RDP80T00246A071100330001-5

Declassified in Part - Sanitized Copy Approved for Release 2013/10/18 : CIA-RDP80T00246A071100330001-5

The needle of all meters will assume the positions they had during the simple communication.

This type of communication is important in air-place communication, because it enables immediate transition from transmission to reception and vice versa.

5./ Duplex communication.

Duplex communication is possible only in such a case ..... when the radio communication unit is equipped with a portable reception control unit ..... which is equipped with a special antenna system.

All the necessary instructions for the utilization of this mode of communication are given in a special instruction manual supplied with the portable reception control unit B.....

4. Reduced output operation.

In cases when the communication distance is not too great, it is necessary to switch the transmitter for reduced power. In this case it is necessary to set the "....."power" toggle switch on the central control panel to the "25%" position. The needles of all meters do not reach the colored section, because the anode currents of the vacuum tubes are reduced as a result of lowering the 5th. and 6th. stage anode vacuum tube voltage. To determine the modulation level at reduced power it is necessary to adjust the "....."("6th.stage tuning") meter needle to the green mark; the green mark on the "....."("modulation level") motor corresponds to 100% modulation level.

9-10. Preparing the remote control unit for operation.

The preparation of the remote control unit consists in laying the connecting line and of setting up the remote equipment.

Declassified in Part - Sanitized Copy Approved for Release 2013/10/18 : CIA-RDP80T00246A071100330001-5

Declassified in Part - Sanitized Copy Approved for Release 2013/10/18 : CIA-RDP80T00246A071100330001-5
NO FOREIGN DISSEM

50X1-HUM

1. Laying the connecting lines.

The following equipment must be transported to the sight of the remote control.

1. The remote control unit.
2. The ..... audio oscillator, only if the connecting line is more than 3 kms.long.
3. The T...- 43 telephone set.
4. The type BC - ? rectifier or three storage batteries.
5. Imprognated tent cloth case containg the remote control unit cables.
6. The folding table and the folding chairs.
7. The asphalt impregnated cloth tent with windows.
8. The asphalt impregnated tent cloth case ± 5 containing the tent equipment.
9. 5 pieces of tent poles.

The audio oscillator and its connecting cables are carried to the remote control sight only in case of necessity, since it is used for removal of frequency distortion which takes place only when the remote control unit is more than 3 kms. away from the radio/van. The storage batteries or power supply rectifiers are taken to the remote control sight depending on local conditions. If no a.c. power line is available it is not necessary to transport the rectifier, and, on the other hand, if such a power line is available, it is not necessary to transport the storage batteries.

Reels with the T - 7 cable are simultaneously removed from the radio van with the above equipment and the connecting line is laid. If the "T" -7 field cable is used for laying the connecting line it is necessary to watbh the division of the

NO FOREIGN DISSEM
Declassified in Part - Sanitized Copy Approved for Release 2013/10/18 : CIA-RDP80T00246A071100330001-5

Declassified in Part - Sanitized Copy Approved for Release 2013/10/18 : CIA-RDP80T00246A071100330001-5
NO FOREIGN DISSEM

line according to pairs - "/....." ("the first pair") and "....." ("the second pair")/

The laying of the connecting line and separation of the conductors can be performed in practise, but it is very complicated. To simplify the separation of the connecting line conductor pairs according to the respective circuits a system of toggle swi switches located in the connecting line is available.

The cover bears the inscription "..... ....." ("line conductor's matching"). Four toggle switches are placed near the just mentioned inscription. These toggle switches are divided into two groups, one of which is inscribed "B....." ("portable reception control unit") and the other one "B....." (remote control unit). Near one toggle switch of both groups in the inscription "....."("first pair") and at the other toggle switch of both groups is the inscription "....." ("second pair").

Before laying the conductors of the connecting line the first conductor pair is connected to the binding posts "7" and "8" on the panel of the cable box section, and the other conductor pair to the binding posts "9" and "10".

After laying the connecting line, the remote control unit "B....Y" is set up.

2./ Setting up the remote control unit.(.....)

In setting up the remote control unit use the following sequence:

1.) Set up the tent.

2.) Set up the folding table for the apparatus inside the tent.

3.) Remove the remote control unit from the case and set it on the table.

NO FOREIGN DISSEM
Declassified in Part - Sanitized Copy Approved for Release 2013/10/18 : CIA-RDP80T00246A071100330001-5

Declassified in Part - Sanitized Copy Approved for Release 2013/10/18 : CIA-RDP80T00246A071100330001-5
NO FOREIGN DISSEM

50X1-HUM

4./ Set the TA-43 field telephone on the table, remove its cover, take the cable out of the cover and with it connect the telephone to the remote control panel.

5./ Remove the BC - 2 rectifier from the case and with one cable connect it the remote control panel and with another cable connect it to the power line. Before doing this, the toggle switch on the wall of the rectifier must be set to the "200" of 110" position, according to the available power line voltage.

If the remote control unit is powered from the storage batteries, remove the batteries from the case and connect them in series with the cables supplied for this purpose. Connect the batteries by means of the appropriate cable with the connector and to remote control unit and the split cable end connect to the batteries. Three type 4 NKN-45M storage batteries suffice for powering the remote control unit. It is strictly prohibited to connect more than three storage batteries to the remote contro unit.

6./ From the rear compartment of the remote control cabinet remove the MPY microphone, the throat microphone with the cord switch and three cables: one for supplying the audio oscillator 3--10-.. and another one for connecting the audio iscillator wit the remote xm control panel B.....

7./ Set the toggle switch handle on the BC...-2 rectifier to the "BK" ("on") position.

8./ Set the pointer of the "....."("supply") selecto switch on the remote control panel to the"....."("d.c. position if storage batteries are used, or to the ("a.c.") position when the rectifier is used.

SECRET
NO FOREIGN DISSEM
Declassified in Part - Sanitized Copy Approved for Release 2013/10/18 : CIA-RDP80T00246A071100330001-5

Declassified in Part - Sanitized Copy Approved for Release 2013/10/18 : CIA-RDP80T00246A071100330001-5
NO FOREIGN DISSEM

50X1-HUM

9./ Plug the microphone into the jack "M" on the remote control panel B..... and set the "PO....." ("mode of communication") selector switch on the remote control panel B to the "....."("semi-duplex") position.

10./ Connect the first pair of the connecting line conductors to the binding posts "7" and "8", whereas the second pair to binding posts "9" and "10". The remote control unit is grounded by the grou ding rod which is stored in the cable bag.

Then the voltage ..... of the amplifier vacuum tube is choked by means of the voltmeter and push button on the panel when the push button is pressed, the voltmeter needle must be in the range of the right hand colored section.

The transmitter operation is checked by calling out a loud "Ah" sound in front of the microphone. By the deflection of the "H.....P.....B HNN" ("voltage in the connecting line") meter needle one may judge how the amplifier is functioning.

After making sure that the remote control unit B functions properly, the operator contacts the radio van by means of the telephone line, in order to match the conductors of the connecting line.

<u>The matching is performed as follows</u>:

The operator at the central control unit locks the automatic tu ing of the amplifier, sets the mode of communication selector switch to the "B....." ("remote control unit") position and turns xm on the r.c.u. If during the connecting the relay of the reception/transmission relay block closes.

r.c.u.- radio comunication. unit.

SECRET
NO FOREIGN DISSEM
Declassified in Part - Sanitized Copy Approved for Release 2013/10/18 : CIA-RDP80T00246A071100330001-5

Declassified in Part - Sanitized Copy Approved for Release 2013/10/18 : CIA-RDP80T00246A071100330001-5
NO FOREIGN DISSEM

it is necessary to set the toggle switch with the ~~m~~inscription "....."/first pair"/ of the "B....."/remote control unit"/ on the connecting panel to the other position; then the relay must remain in the reception position. If the second transmitter commu munication channel is being connected, it is necessary that the toggle switch with the inscription "....."/second pair".be switched to the other position and to simultaneously press the push button of the first communication channel on the remote control panel B.....-

9-11. Checking the r.c.u. control from the remote control unit. To check the control of the r.c.u. from the remote control unit B..... the operator of the remote control unit B....must ring the operator of the central control unit..... and instruct him to turn on the r.c.u. to switch the control to the remote control unit B..... The supply is connected to the remote control unit B..... and the unit is prepared for operation in the appropriate way. The "PC....."/..... of communication/ selector switch on the remote control panel is set tothe "..... ....."/semi duplex".position.

The push-button of the first communication channel selector is ~~xxx~~ pressed and after 10 sedonds, which are reguired for the autotune operation, the push button on the MP.....microphone handle is pressed; at the same instant the pilot lamp "....."/ "transmitter operation indication"/ should light up on the panel; if the lamp fails to light up, it means that for some reason the transmitter is not operating.

When the pilot lamp "....."/"transmitter operation indication"/ lights when the push button is pressed, it means that the transmitter operates normally.

Then it is necessary to press the push button on the micrp- phone handle and to call out a long "Ah" sound and by

NO FOREIGN DISSEM
Declassified in Part - Sanitized Copy Approved for Release 2013/10/18 : CIA-RDP80T00246A071100330001-5

Declassified in Part - Sanitized Copy Approved for Release 2013/10/18 : CIA-RDP80T00246A071100330001-5
NO FOREIGN DISSEM

turning the volume control to insure a sufficient voltage (signal strenght). The voltage is determined by means of the "....." voltage of the connecting line voltmeter. The operator at the central control unit ..... telephone over the remote control unit..... telephone whether the voltage arrives at the audio frequency section of the transmitter.

After controlling the operation on the first channel, it is necessary to successively press the push buttons of the 2nd, 3rd. and 4th. communication channel and with each one of them to control the signalization operation of the transmitter and the modulation.

If with any of the four communication channels the pilot lamp on the remote control panel B..... fails to light up, it means that the transmitter is not tuned into the channel. In such a case it is necessary to telephone to the radio van and give an order to tune the particular communication channel and repeat the control test from the remote control unit.

If with any if the four communication channels overmodulation appearsm it is necessary to reduce the modulation to "100 %" by the ....."("modulation level control") knob on the central control unit .....(when operating on the particular channel).

Besides the transmitter, it is also necessary to test the receiver part of the radio commu ication unit. For this purpose it is necessary to plug the A-4 phones into the jack "T". With the push button on the microphone released and with the main receiver (in the radio van) tuned, the hum of the receiver must be audible both in the phones and from the dynamic loudspeaker. The regulation of the receiver volume is checked by turning the knob with the inscription "....."("volume

SECRET
NO FOREIGN DISSEM
Declassified in Part - Sanitized Copy Approved for Release 2013/10/18 : CIA-RDP80T00246A071100330001-5

Declassified in Part - Sanitized Copy Approved for Release 2013/10/18 : CIA-RDP80T00246A071100330001-5
NO FOREIGN DISSEM

50X1-HUM

control"). After pressing the push button on the microphone handle the hum in the dynamic loudspeaker and in the phones disappears ~~Xix~~ This test must be performed on all of the four communication channels. When the remote control unit is powered by storage batteries the separate circuits of this unit require the following currents:

1./ for heating the amplifier tube filaments - 1 ampere.
2./ for the pilot lamp circuit - 0,3 "
3./ for the vibrator converter - 1,2 "

For powering the remote control unit B....., as mentioned already before, three 4 storage batteries must be available, with all of them connected in series into one battery set.

The amplifier vacuum tube filament current is taken from 6 cells while the current for the vibrator is taken from all cells.

The negative end of the battery is loaded by 1,3 amperes more than the positieve end and therefore is discharged faster. It is possible to operate the remote for about 18 hours, until they are completely discharged. This time may be prolonged (up to 24 hours), if, after 12 hours of uninterrupted work the .....-45 M battery is reconnected in the reverse sequence. In such a case the discharging of the batteries will be much more uniform.

9 - 12. Equalizing the fr quency distortion caused by the connecting.

Equalizing of the frequency attenuation of the connecting line must be performed whenever the connecting line laid

SECRET
NO FOREIGN DISSEM
Declassified in Part - Sanitized Copy Approved for Release 2013/10/18 : CIA-RDP80T00246A071100330001-5

Declassified in Part - Sanitized Copy Approved for Release 2013/10/18 : CIA-RDP80T00246A071100330001-5
NO FOREIGN DISSEM

between the radio van and the remote control unit B..... is longer than 3 kms.

The coordination of tasks of the central control unit and remote control unit operators is accomplished by the service telephone communication line between them, using the conductors of the same line connecting.

Before starting the equalizing operation the following operation must be performed:

By the remote control unit operator B.....

1./ The operator places the remote control unit B.... into the operating condition and insured its normal power supply.

2./ Connects the ;.....- 10 - audio oscillator by means of a special cable to the remote control panel.....-

3./ Connects the branched cable and to the audio oscillator binding posts being careful to connect the "+" and " - " ends correctly according to the markings.

4./ Inserts the cord plug into the "M" jack on the panel.

5./ Adjust the input to the connecting line to 10 volts by operating the volume control knob and reading the "....." ("connecting line voltage") meter.

6./ To the radio van by telephoning the completion of all of these tasks.

And simultaneously by the central control unit poperator.....:

1./ puts the r.c.u. into operation at reduced power.

2./ announces by telephoning to the remote control unit the number of the selected channel,

3./ turns the pointer knob of equalizing network of the selector switch with the inscribtion "KOPPER No. ....."("connecting line equalization") to the position "4".

r.c.u.= radio communication unit.

SECRET
NO FOREIGN DISSEM
Declassified in Part - Sanitized Copy Approved for Release 2013/10/18 : CIA-RDP80T00246A071100330001-5

Declassified in Part - Sanitized Copy Approved for Release 2013/10/18 : CIA-RDP80T00246A071100330001-5
NO FOREIGN DISSEM

50X1-HUM

4./ turns the modulation level & control knob to the extreme right position,

5./ Connects the vacuum tube voltmeter which measures the voltage of the audio section input and announces the completion of the above tasks to the remote control unit B.....

The control unit selector switch is set to the "B....." ("remote control unit") position.

Meanwhile the central control unit operator then starts. the equalization proper (correction) of the frequency attenuation characteristic of the connecting line.

He performs the following ranks:

1./ Commands the remote control unit operator B... to adjust the necessary frequency (5000, 1000 or 200 cps.) and voltage of the connecting line, which is the same for all frequenzies and which is sufficient at the existing attenuation of the connecting line, so that the vacuum tube voltmeter will read 0,3 volts.

Notes the indications of the vacuum tube voltmeter at all three audio oscillator frequencies.

The task of the central control unit operator ends, when he finds such a position of the "KOPPEK....."("connecting line equalization) selector switch on the central control panel ....., at which the voltage at the transmitter audio section differ from each other by the smallest amount.

It is convenient to make a graph of the transmitter audio section input voltage versus the frequency adjusted on the audio oscillator and repeat this for every position of this selector switch.

SECRET
NO FOREIGN DISSEM
Declassified in Part - Sanitized Copy Approved for Release 2013/10/18 : CIA-RDP80T00246A071100330001-5

Declassified in Part - Sanitized Copy Approved for Release 2013/10/18 : CIA-RDP80T00246A071100330001-5
NO FOREIGN DISSEM

By changing the position of this selection switch the slope of this curves changes too. In the ideal case this curve becomes a straight line which is parallel to the ordinate (on which the frequencies are plotted).

When the distance of the connecting line between the radio van and the remote control unit is shorter than 3 kms., the knob of the "KOPPEK....."("connecting line equalization) selector switch must be set to the "1" position, whereby the compensating circuit is disconnected.

9 - 13. Operation of the R.C.U. after a long idle period.

1/ Special features of some of the r.c.u. elements.

1./ When the .r.c.u. is stored for a longer period, it must be protected by conservation.

To place such a conservated r.c.u. back into service the conservation must be removed.

2./ The metal ceramic/...../ vacuum tubes require particular attention.

Before operating the transmitter, which had not been working for a longer period at full power, the vacuum tubes (.....) of the second and output power amplifiers, (of the 5th. & 6th stage) must first be "hardened".

3./ The selenium rectifier elements in the r.c.u. rectifier lose their rectification abikity (are "deformed") after a prolonged idle period.

When the rectifier with "deformed" selenium elements is connected to the normal a.c.potential, the transformers may be greatly overloaded up to the burning out of the respective fuses or the selenium elements may be damaged.

r.c.u. = radio communication unit.

Declassified in Part - Sanitized Copy Approved for Release 2013/10/18 : CIA-RDP80T00246A071100330001-5

Declassified in Part - Sanitized Copy Approved for Release 2013/10/18 : CIA-RDP80T00246A071100330001-5
NO FOREIGN DISSEM

50X1-HUM

Therefore it is necessary, when operating the rectifiers for the first time, or after a prolonged idle period as well as after de-conservation of the r.c.u. to operate at a reduced power source voltage.

4./ A protective interlocking system in the high voltage contactor (3302) control unit circuit is available for the protection of the personnel against the effect of high potentials and for the protection of the ..... vacuum tubes against overheating when the cooling rate is insufficient. If any of the contacts of this system fails to close, the contactor cannot close even if the rest of the r.c.u. is in otherwise good operating order and the d.c.high voltage will not reach either the anode or the screen grids of the transmitter vacuum tubes.

If with the normal (not emergency) connection of the r.c.u when all the transmitter elements are in their respective positions, the high voltages nevertheless does not close, it is necessary to check the position of the "....." ("emergency") toggle switch (...313) on the front panel of block = 1 of the RCP-6.. rectifier and then the position of the contacts in the blocking system.

5./ The design of all selector switches, contactors, relays multicontact plugs, (terminal boards) and receptacles (terminal boards), the telescopic tower as well as the transmitter communication channel automatic tuning mechanism insured their long trouble free operation if procer lubrication is maintained. Therefore, before every idle period of the transmitter the lubrication of all important surfaces must be thoroughly checked and any faulty conditions that may be found must be rectified.

r.c.u. - radio communication unit.

Declassified in Part - Sanitized Copy Approved for Release 2013/10/18 : CIA-RDP80T00246A071100330001-5

Declassified in Part - Sanitized Copy Approved for Release 2013/10/18 : CIA-RDP80T00246A071100330001-5
NO FOREIGN DISSEM

50X1-HUM

2./ Preliminary operations.

When first placing the r.c.u. into operations or after each long idle period the following preliminary operations must be performed.

The main operations are the following:

1./ Check whether the components and the technical documentation of the r.c.u. are in order.

2./ Remove the r.c.u. conservation.

3./ Make a check up of the mechanical elements of the r.c.u.

4./ Remove any defects found during the mechanical check up.

5./ Lubricate all sliding surface of the r.c.u. elements.

6./ Set up the r.c.u.

It is recommende simultaneously with the checking of the components to determine their conditions as far as the quality is concerned.

All spare parts must be in their place with a note of their suitability and dates of tests.

During the mechanical check up of the r.c.u. elements it is necessary to:

1). Determine any lowering of strength of the mechanical connections (riveted, bolted, corrosion, the x condition of soldered and mechanical contacts, defective plating, damaged shielding and insulation, condition of storage batteries, lubrication, etc.

2). Check the telescopic tower.

3). Make a list of all defects which must be repaired.

The mechanical check must be performed very thoroughly.

During the mechanical check be careful not to cause.

r.c.u. = radio communication unit.

SECRET
NO FOREIGN DISSEM
Declassified in Part - Sanitized Copy Approved for Release 2013/10/18 : CIA-RDP80T00246A071100330001-5

Declassified in Part - Sanitized Copy Approved for Release 2013/10/18 : CIA-RDP80T00246A071100330001-5
NO FOREIGN DISSEM

50X1-HUM

any damage, tearing of the conductors) breaks in cables interchanging and incorrect placing of components such as condensers, resistors, turns loops) of circuit and induction coils etc.) by impact or by dropping.

It is permitted during the preliminary operations to remain only such defects, whose causes are determined and when the method for correcting them are absolutely clear and suitable to the abilities of the attending personnel and which may be performed with the tools and spare parts of the r.c.u. In other cases the repair should be made as far as possible at a repair shop, because an unqualified repair job may result in a prolonged removal of the r.c.u. from service.

The main operations in removing mechanical defects are the following:

1./ Tightening and locking of screw connections.
2./ Riveting and tighteningof rivets.
3./ Cleaning and washing of components which are apt to corode or rust.
4./ Painting of bare surfaces.
5./ Removal or repair of insulation.
6./ Bending of contact springs.
7./ Cleaning and washing of contacts, plugs, connectors, selectorsswitches, etc.
8./ Removal of old lubrication and application of new lubrication.
9./ Correcting the location of ..... placed components:

r.c.u. = radio communication unit.

SECRET
NO FOREIGN DISSEM
Declassified in Part - Sanitized Copy Approved for Release 2013/10/18 : CIA-RDP80T00246A071100330001-5

Declassified in Part - Sanitized Copy Approved for Release 2013/10/18 : CIA-RDP80T00246A071100330001-5
NO FOREIGN DISSEM

50X1-HUM

10./ Blowing out with clean fresh air.

11./ Sewing of torn clothes.

12./ Cleaning of the converter and exciter commutators, and of the generator collector.

13./ Washing out of oil air filters.

14./ Replacements of damaged components by new ones from the spares.

15x/ Lubrication of friction surfaces of the r.c.u. components must be performed according to instructions given below in chapter 11, paragraph 11-7.

The layout of the r.c.u. must be made according to instructions listed in this chapter (paragraphs 9-1 and 9-3).

3. Connecting the r.c.u.

After completion of the preliminary operations the r.c.u must be immediately prepared for operation according to instructions in this chapter, paregraphs 3-4 and 9-5.

When setting up the r.c.y. safety precautions and the sequence of individual operations must be strictly abided by.

To reduce the number of transmitter failures during the r.c.u. operation caused by faileres of the ..... vacuum tubes in the 5th. and 6th.transmitter stages, it is recommended to start the radio communication unit operation when first placing it into service or after a prolonged idle periodes in the following manner:

1./ Set the "....."("high voltage") toggle switch on the first transmitter section to the "....." ("off") position.

2./ Set the selector switches on the central control panel as follows:

r.c.u1 = radio communication unit.

NO FOREIGN DISSEM
Declassified in Part - Sanitized Copy Approved for Release 2013/10/18 : CIA-RDP80T00246A071100330001-5

Declassified in Part - Sanitized Copy Approved for Release 2013/10/18 : CIA-RDP80T00246A071100330001-5
NO FOREIGN DISSEM

50X1-HUM

1./ the "....."("control units") selector switch to the "....." ("central control unit") position,

2./ the "....."("anode of communication") selector switch to the "C" ("simplex") position,

3./ the "....." ("power") selector switch to the "25%" position.

3). Start the radio communication unit by pressing the oush button "P.- ....."("....") ("on") on the central control panel....."

4). After 1-1/2 hours set the "....."high voltage" toggle switch on the first transmitter section to the "....." ("on") position (connecting the high voltage).

5). Press the respective push button of the communication channel selector on the central control panel thus connecting the required communication channel and tuning all stages of the transmitter high frequency section.

After one hour of transmitter operation at reduced power set the "....."("power") selector switch on the central control panel to the "100%" position (the transmitter is switched to full power) and tune the high frequency stages of the section.

As a result of this procedure for the first one and half hours the ..... vacuumm tubes will be supplied only with filament power and then they will operate for an additional hour at reduced power.

All of this insures proper "hardening" of the ..... vacuum tubes and lowers the rats of failures during servic

In case that the selenium elements of the 300 V rect are properly electrically formed and in case that all

r.c.u. - radio communication unit.

SECRET
NO FOREIGN DISSEM
Declassified in Part - Sanitized Copy Approved for Release 2013/10/18 : CIA-RDP80T00246A071100330001-5

Declassified in Part - Sanitized Copy Approved for Release 2013/10/18 : CIA-RDP80T00246A071100330001-5
NO FOREIGN DISSEM

50X1-HUM

other rectifier elements of the - rectifier operate normally, the transmitter should not be switched to full (100%) power, since the el.deformed-300 V rectifier(supply) supplies the grid bias circuits of the transmitter vacuum tubes at a reduced voltage, as a result of which its vacuum tubes and other components might be damaged at full power. The transmitter may operate at full power only when the electric forming of the selenium elements of the - 300 V rectifier has been completed.

4. Rules for operating the r.c.u. rectifiers after a prolonged idle period.

When placing the r.c.u. rectifiers for the first time after a prolonged idle period, or after de-concerving the r.c.u. the rectifiers must first be operated at a reduced.supply voltage.

Since with the reduced voltage the contactors cannot operate, the BCP-6 rectifier must be switched on manully before connecting it to the power line by setting the switch on block ±3 to the "BK" ("on) position. The reduced voltage with a value between 100 and 127 V is obtained from the mobile power plant (the 220 V - 380 V" selector switch on the BCP. rectifier block ± 5 should be in the "220 V" position).

The knobs of the voltage regulator on the block ±5 must be set to the position which corresponds to the low voltage (position "1") The "....."("power - line - off - powerplant") selector switch on block ± 5 is set to the "....." ("power plant") position whereas the r.c.u. switch on block ± 4 is set to the "....."("on") position.

r.c.u. = radio communication unit.

SECRET
NO FOREIGN DISSEM
Declassified in Part - Sanitized Copy Approved for Release 2013/10/18 : CIA-RDP80T00246A071100330001-5

Declassified in Part - Sanitized Copy Approved for Release 2013/10/18 : CIA-RDP80T00246A071100330001-5
NO FOREIGN DISSEM

50X1-HUM

With the instrument - 312 which is a part of the r.c.u. auxilliaries, the d.c. voltage is checked on the 4 terminal board; the voltages are reduced. The .....-312 meter remains connected to the 1,35 KV jacks of the terminal board.

Then the a.c. ъ voltage is gradually increased by means of the voltage regulator knob on the ±5 block. At each step wait 1 to 2 minutes and watch the rectified current. During the this operation the meter needle should stay at rest.

After going over all the regulator steps, return the knob to position "1" and adjust the power plant for the normal voltage of 220 V. Only then gradually by means of the voltage regulator on block ± 5 adjust the voltage tp 220 V.

When the d.c. voltage measured at the terminal board ± 4 appears to be normal, set the manual control switch of the BCP-6 rectifier to the "OTK" ("off") position and turn on the rectifier on the usual way from the central control unit.

In case that it is not possible to use the mobile power plant, when placing the rectifier into service for the first time, and the r.c.u. is powered from a power-line, then the power line must have a reduced voltage. If the power line voltage is 220 V, it is possible to obtain the reduced voltage in the following way.

Set the "220 V-380 V" selector switch, which is built into the ± 5 block, to the 380 V" position. Connect the power line. Set the voltage regulator knob to the "...." position. Set the "....." ("power line-off-power-plant") selector switch to the "СЕТ"" ("power-line")position. The voltage in the block ± 5 voltmeter.

r.c.u.= radio communication unit.

Declassified in Part - Sanitized Copy Approved for Release 2013/10/18 : CIA-RDP80T00246A071100330001-5

Declassified in Part - Sanitized Copy Approved for Release 2013/10/18 : CIA-RDP80T00246A071100330001-5
NO FOREIGN DISSEM

50X1-HUM

will be about 100 V. Set the normal control selector switch of the BCP-6.. rectifier to the "BK.."/"on"/ position. Then gradually raise the voltage by turning the voltage regulator knob on the ± 5 knob block from position. "1" to position "8" and at each position dwell 1 to 2 minutes. Then set the "220 V-380 V" selector switch on block ± 5 to the "220 V position and once more gradually raise the voltage to 220 V by means of the voltage regulators.

When the rectified voltage metred on block ±4 is normal, turn on the rectifier BCP-6 in the usual way from the central control unit ".....", having first set the manual control switch of the BCP-6 rectifier to the "....."/"ogfy"/ position. This sequence of operations in placing the BCP-6.. rectifier into service insures the electric forming of the rectifier elements and the rectifying properties of the rectifier selenium elements are thereby renewed.

The electric forming of the BC..-Z rectfifier and the BCP-6 receiver power supply rectifiers is performed simultaneously with the electric forming of the rectifiers which form the BCP-6 rectifier unit.

Before electrically forming the rectifiers which belong to the BCP-6.. rectifier unit turn on the charging rectifier and both of the BC..-2 rectifiers and while raising the a.c. voltage check the raised voltage on the charging rectifier voltmeter and simultaneously the voltmeter on the receiver panels. The supply selector switch on the BC..-2 rectifier must be in the "220 V" position. The charging rectifier may be electrically formed either with or without the storage bateries connected to it.

NO FOREIGN DISSEM
Declassified in Part - Sanitized Copy Approved for Release 2013/10/18 : CIA-RDP80T00246A071100330001-5

Declassified in Part - Sanitized Copy Approved for Release 2013/10/18 : CIA-RDP80T00246A071100330001-5
NO FOREIGN DISSEM

50X1-HUM

If the power-line voltage is 380 V, it is prohibited to connect the rectifiers which have been out of service for a longer period of time.

If during the electric forming of the rectifiers the rectified voltage of the BCP-6 rectifier as comtroled on the terminal board of the block № 4, is not, the rectifier may be considered faulty. normal

Chapter 10.

Packing the radio communication unit.

19- 1. Lowering of the tower with the antenna equipment and packing the antenna.

The lovering of the tower with the antenna equipment is performed in the opposite way than the raising of the tower was performed. When lowering the antenna it is necessary to maintain the same precautions as during the raising.

To lower the tower turn the raising mechanism ..... counter clockwise (i.e. in the opposite direction than when raising the tower).

Just as during the raising, the lowering of the tower is performed by a 5 men squad who have the same jobs as before.

During the lowering of the tower the men stand at the guy cables, they tension them evenly and at the same time equalize or lessen the tension of the cables according to the commands of the squad leader, who stands in the line at right angles to the wind with respect to the tower and the squad thus maintains the tower in a perfectly vertical position.

The crank is turned so long until all of the towet section cable holders (brackets) meet.

Further turning of the crank is forbidden, because the

SECRET
NO FOREIGN DISSEM
Declassified in Part - Sanitized Copy Approved for Release 2013/10/18 : CIA-RDP80T00246A071100330001-5

Declassified in Part - Sanitized Copy Approved for Release 2013/10/18 : CIA-RDP80T00246A071100330001-5
NO FOREIGN DISSEM

50X1-HUM

steal cable would then be wound on the drum in the opposite direction, ans as a result of this, might be damaged by strand breskage or by loop formation.

The crank is turned evenly at such a rate that the lowering will last 1,5 to 2 minutes.

The guy cables are then disconnected from the tower and are wound on to the reels. The cable reels with the cables are then stored in asphalt treated cloth bags with the cables of the 2nd.section placed in the bag 2, the cables of the 3rd.section in bag 3 and the cables of the 4th.section in bag 4.

The signalizing equipment is unscrewed, its cable is wound up and stored in the place determined by the r.c.u. layout place.

Next the radiator is removed and the feeder cable is wound on the reel and all the equipment is stored in the proper places and the stop of the tower is protected by puling a cover over it.

The grounding rod and the guy cable anchering pegs are removed from the ground and together with the mallet which has been used for removing the pegs are stored in the proper box.

The crank of the tower raising machanism is folded and tied with a leather strap to the raising mechanism.

After storing the above mentioned equipment one may proceed with the further packing of the r.c.u.

10-2. Packing of the connecting line and the remote equipment.

The remote control unit must be packed in the following way:

r.c.u. = radio communication unit.

SECRET
NO FOREIGN DISSEM
Declassified in Part - Sanitized Copy Approved for Release 2013/10/18 : CIA-RDP80T00246A071100330001-5

Declassified in Part - Sanitized Copy Approved for Release 2013/10/18 : CIA-RDP80T00246A071100330001-5
NO FOREIGN DISSEM

50X1-HUM

1./ Disconnect the cables from the rectifier, close the rectifier lid and pull a cover over it.

If storage batteries were used for the power supply, disconnect the cable from the remote control panel and remove the connections between the individual batteries. Store the cables and connectors in the asphalt treated cloth bag.

2./ Roll up the microphone, TA-4 phone and audio oscillator cords and store them in the rear compartment of the remote control unit.

3./ Disconnect the TA..-43 telephone set, roll up its cord and store it in the appropriate place in the apparatus.

4./ Disconnect the connecting line conductors, covers the front panel of the remote control unit with lids and pull a cloth cover over the unit.

5./ Wind the T - 7 cables on reels and store them in their place.

6./ Fasten the remote control unit ..... and the ....-2 rectifier to the floor of the radio van near the BCP_6 rectifier.

7./ Store the asphlat treated cable bag.

8./ Fasten the storage batteries in the chest-seat (in the radio van).

10 - 3. Packing the radio van section of the r.cu.

Pack the radio van equipment in the following order:

1./ Unscrew the antenna feeder connector from the reception transmission relay. Throw the end of the feeder out of the van so that the screw threads on the connector nut will not get damaged.

2./ Pull the headphone TA-4 and microphone plugs out of the

r.c.u. = radio communication unit.

SECRET
NO FOREIGN DISSEM
Declassified in Part - Sanitized Copy Approved for Release 2013/10/18 : CIA-RDP80T00246A071100330001-5

Declassified in Part - Sanitized Copy Approved for Release 2013/10/18 : CIA-RDP80T00246A071100330001-5
NO FOREIGN DISSEM

50X1-HUM

jacks of the central control panel, the common panel of both receivers and the control panel of the auxiliary receiver. Wind up the cords and place everything into the cabinet.

3./ Unscrew the antenna connection feeder connector grom the reception-transmission block and from the receiver and store the feeder in the drawer.

4./ Remove the quartz crystals from their holder in the transmitter as well as in the receivers and place them in their respective crystal boxes. So careful when handling the crystals and protect them against inpact.

5./ Cover the front panel of the receiver and pull tent cloth covers over the transmitter and the BCP-6.. rectifier.

6./ Cover the front panel of the receivers by covers and pull a cloth cover over the receiver rack.

7./ Pull covers over the amplifier with the dynamic loud-speaker and also over the ventilator on the left side of the van, having first closed the lid with the handle on its right side, Also cover the charging rectifier and the aucilliary receiver control unit.

8. Disconnect the BC..-2 rectifier cables, close the ventilating window and raise the louvers on the rectifier side wall; pull a cover over this unit and fasten it with straps.

9./ Lock the locks of all drawers and boxes.

10./ Take down the antenna of the auxilliary receiver and store it into the box an lock the same.

10 - 4. Packing the electric power plant.

The packing of the el.power plant must be performed in this order.

1. Disconnect the power and signalizing cables and wind them

SECRET
NO FOREIGN DISSEM
Declassified in Part - Sanitized Copy Approved for Release 2013/10/18 : CIA-RDP80T00246A071100330001-5

Declassified in Part - Sanitized Copy Approved for Release 2013/10/18 : CIA-RDP80T00246A071100330001-5
NO FOREIGN DISSEM

50X1-HUM

into reels and place these into their locations.

Disconnect the telephone set, wind its cord around the microphone and place it in the telephone set and cover the same.

Fasten the telephone set with streps.

Pull the grounding rod out of the ground, clean off the coil and store it in the box.

Pull a cloth cover over the generator.

Check the location and fastening of all of the equipment.

Besides this, the following tasks must be performed:

Lift the side boards and end boards of the trailer, cover it by the tarpaulin having first closed the windows. Fasten the tarpaulin to the side boards with straps.

Fold the support and fasten it with sttaps to lower, rear platform under the trailer.

Then roll the trailer to the radio-van (or drive the radio-van to the trailer), connect them up and then raise the third trailer support wheel and fasten it with a bolt.

C h a p t e r. 11.

Regular maintenance of the radio van apparatus and of the r.c.u. equipment.

11 - 1. General instruction.

As long as the r.c.u. is not in operation the radio van windows should be closed, as well as the covers and also the ventilator panels and all equipment should be covered with cloth covers. Maintain strict cleanliness inside the radio van. Dust settling on the equipment must be frequently wiped off.

When the r.c.u. has been out of service for a longer period of

r.c.u. = radio communication unit.

NO FOREIGN DISSEM
Declassified in Part - Sanitized Copy Approved for Release 2013/10/18 : CIA-RDP80T00246A071100330001-5

Declassified in Part - Sanitized Copy Approved for Release 2013/10/18 : CIA-RDP80T00246A071100330001-5
NO FOREIGN DISSEM

50X1-HUM

time it must be tested under power.

The r.c.u. must be particularly carefully maintained in rainy, foggy or cold periods, since this kind of weather may be the reason of a large number of troubles.

The operation of the transmitter and receiver must be checked on four communication wave length (channels); at two extreme wavelengths and at two wave lengths in the middle of the range. The tuning is performed as per the rules and instructions explained in chapter 9.

11 - 2. Care of the transmitter.

The transmitter must be regularly (once in a month) locked over and cleaned from dust and dirt. The transmitter must be regularly blown out with compressed air (from a compressor).

It is particularly useful to blow out the circuits of the 5th. and 6th. stages with air, since with the cooling air for the vacuum tubes dust particles, which are not trapped by the air filter, are carried along. The dust particles settle on the circuit components and on the walls of the shielding sheets and after some time the dust may short circuit the inner and outer shieldings which will cause a short-circuit in the bias circuit and result in putting the r.c.u. out of service.

After every 40 hours of service the transmitter and rectifier BCP-6 air oil-filter must be cleaned from dust and dirst by washing, but before replacing the filter, it must be submerged in a 20 - 30% solution of oil in gasoline (petrol) or in keresene. Before operating the transmitter and the BCP - 6 rectifierse after a longer idle period, the condition of their air-oil-filters must be checked.

r.c.u. = radio communication unit.

SECRET
NO FOREIGN DISSEM
Declassified in Part - Sanitized Copy Approved for Release 2013/10/18 : CIA-RDP80T00246A071100330001-5

Declassified in Part - Sanitized Copy Approved for Release 2013/10/18 : CIA-RDP80T00246A071100330001-5
NO FOREIGN DISSEM

50X1-HUM

During the close inspection of the equipment it is necessary, to :

1./ Test the proper connection of the boards, connectors, plugs etc. multi-contact terminal.

2./ look over the sliding contacts, knife contacts, the contacts of all visible selector switches and wipe them with a clean cloth dipped in first grade alcohol or benzine;

3./ look over the multi-contacy plugs (terminal boards) in the transmitter and on the BCP-6.. rectifier, clean them from dust and wipe them with a cloth dipped in first grade alcohol or benzine;

4./ look over the vacuum tube compartments and clean off the dust;

5./ check the proper seating of the vacuum tubes in their sockets; attention to the seating of the ...-7.. Pay particular [illegible] vacuum tubes of the 5th.and 6th.stage of the high frequency transmitter section in the resonant line tubes.

The bosses of the anode cooling pins of these vacuum tubes must be properly seated in the slots of the outer tubes (pipes) and doors of these tubes; if these conditions are not met, the doors on the tubes will not properly shut and the vacuum tubes will be badly seated in their sockets. Fail to contact the socket contacts and the spring contacts may be damaged.

Look over the relays for connecting the quartz crystals. First of all pay attention to the surfaces of the relay armature. If the contacts are dirty, they must be cleaned or washed; the cleaning is performed by a thin steel plate and the washing

SECRET
NO FOREIGN DISSEM
Declassified in Part - Sanitized Copy Approved for Release 2013/10/18 : CIA-RDP80T00246A071100330001-5

Declassified in Part - Sanitized Copy Approved for Release 2013/10/18 : CIA-RDP80T00246A071100330001-5
NO FOREIGN DISSEM

50X1-HUM

by a clean fine cloth dipped in first grade alcohol or benzine. The relay armature must move freely without rubbing.

7./ Test the reception-transmission relay.

8./ Lock over and test the transmitter and receiver automatic tuning mechanisms and the relay blocking system of the BCP-6 rectifier.

11 - 3. Care of the reciever.

First of all it is necessary that nobody should touch any components of parts of the receiver structure which are under high tension (the receiver circuits are under 275 V.d.c.) while tuning, checking faults, repair work, etc.

After tuning the reciever with the measuring instrument ("block" ....") the lever mechanism with the stepping relay must be covered by a cover.

As long as the receiver is not in service, the levers (pull rode) of the tuning mechanism must be released by pressing the push-button "....."("release").

It is not permitted:

1./ To turn the locked knobs of the tuning mechanism by force when a communication channel is selected.

If this rule is not abided by, it is possible to damage the lever mechanism by bending the limiters.

It is possible to release or lock the kenobs only when the tuning mechanism has been released by means of the "....." ("release") push-button.

2./ To use a lower vacuum tube fillament voltage than 21 V or a greater one than 30 V.

By not abiding to this rules it is possible that the automatic tuning equipment and vacuum be put out of service.

SECRET
NO FOREIGN DISSEM
Declassified in Part - Sanitized Copy Approved for Release 2013/10/18 : CIA-RDP80T00246A071100330001-5

Declassified in Part - Sanitized Copy Approved for Release 2013/10/18 : CIA-RDP80T00246A071100330001-5

It is necessary to realize that the reduced voltage is as dangerous as overvoltage is.

3./ To interchange the vacuum tubes during their replacement.

In case that the 6K4 and 6..2 the vacuum tubes were interchanged the protective resistors in the receiver intermediate frequency anode circuits will invariably put out of service.

When looking the receiver over the following items must be checked:

1./ The connec ion of the distributing connectors which connect the receiver to the common panel of both receivers and to the reception relay.

2./ The correct seating of the x vacuum tubes in their sockets, the cleanliness and correct insertion of their prongs.

3./ The accuracy and correctness of the receiver automatic tuning device operation by checking its operation with the measuring element.

4./ The state of the stopping-relay contacts. If any burning is evident the contacts myst be x cleaned with a clean cloth dipped in first grade alcohol or benzine. If the interrupter contacts of the stepping-relay heat or a metal transfer takes place, the contactss must be cleaned with chemical cleaners.

When the receiver is readied for service in cold weather, a thin film of light non-stiffening lubricant must be ..... on the rotating shafts of the lifting levers (push rods).

11 - 4. Care of the electric power supply equipment.

1. Care of the rectifier BCP - 6..

As long as the radio cammunication unit is in service the BCP - 6 rectifier does not reguire any particular attention. The attendants must check the a.c. voltage value on the voltmeter in block

Declassified in Part - Sanitized Copy Approved for Release 2013/10/18 : CIA-RDP80T00246A071100330001-5

Declassified in Part - Sanitized Copy Approved for Release 2013/10/18 : CIA-RDP80T00246A071100330001-5
NO FOREIGN DISSEM

....5 and, if necessary, readjust the voltage to 220 V. From time to time particularly in cases of transmitter damage, it is recommended to check the value of the rectified potentials with the portable voltmeters, and if these are below normal, it is necessary to determine and remove the fault.

To forego sudden damages, check and clean the rectifier regularly (once in a month or along with the compulsary maintenance.).

Even though the rectifier has air oil filters, a greater ampunt of dust may enter into it both through the filters and through the cranks between the blocks.

The blocks are pulled out of the rack once a month for cleaning and the individual sections and selenium columns are carefully blowed of the dust.

When the removed blocks are being replaced, it is necessary to watch that the numbers on their contacts pabels agree with the numbers of the contact panels to which they are fastened.

The dirty air-oil filters are washed out in benzine with 20 - 30% of oil added, then the liquid is dried and the filters sre assembled in their holders in a reversed position to the one they had before. The filters are cleaned as the need arises depending on how they clog up and usualy they are cleahed after every 40 hours of rectifier service.

Once in 6 months the state of the contactor and relay contacts should be checked. For this purpose the selenium column blocks must be removed whereby their contacts and their relays because accessible. The test of the contacts and contactors is made by lifting the contact bridges and turning them sideways.

SECRET
NO FOREIGN DISSEM
Declassified in Part - Sanitized Copy Approved for Release 2013/10/18 : CIA-RDP80T00246A071100330001-5

Declassified in Part - Sanitized Copy Approved for Release 2013/10/18 : CIA-RDP80T00246A071100330001-5
NO FOREIGN DISSEM

50X1-HUM

A regular black coating of the contact surface is not a faulty condition, sinde the black silver oxide is a good electric conductor. In case of more serious burning and thicker layers of exide it is, however, necessary to clean the contacts with a steel scratcher, a screw driver or amory cloth; in doing this be sure to remove only a thin layer of the silver, particularly if the oxide layer is thick. It is forebidden to use leather for cleaning of the contacts.

When reassembling the moveable parts of a contactor which has been taken apart, it is necesaary to watch out that the conical spring be seated with its narrow and into the electromganet of the contactor. Then the armature is assembled alond-side the spring into the electro;magnet. After seating the contact lever, check whether the armature motion is free by several times depressing it, when doing this watch whether the auxiliary contact opens at the very end of the armature motion.

The contacts are cleaned by means of a specially hardened and sharpened tool or by a tool made of stainless steel. Excessive contact pressures are to be avoided in order not to bend the contacts while cleaning them, since all relays are adjusted only for a certain specific current.

Of other faults are discovered on the relay contacts, then it is adviceable to replace the entire contact set by a new one from rectifier spares. When plugging the relays into their jacks it is necesaary to check the inscriptions on the relay covers and the inscriptions near the jacks.

If a relay were to be plugged into the wrong jacks, the rectifier

SECRET
NO FOREIGN DISSEM
Declassified in Part - Sanitized Copy Approved for Release 2013/10/18 : CIA-RDP80T00246A071100330001-5

Declassified in Part - Sanitized Copy Approved for Release 2013/10/18 : CIA-RDP80T00246A071100330001-5
NO FOREIGN DISSEM

50X1-HUM

would not operate.

If fuase burn out it is first of all necessary to determine and to remove the cause of trouble. When replacing new fuses in place of burned out once, fuses of the same current rating must be used. The ratings are marked on both the fuses and on the panels near the fuse holders. The use of fuses with other ratings or the use of "jampers" is strictly forbidden.

When the radio communication unit operates at a high ambient femperature the selenium elements must be watched. If the pilot lamps "_____"("....") lights, the transmitter must be turned off and the cause of the overheating must be determined. The cause for overheating may be dirty air-oil filters or overloading of the rectified current. If time permits, it is necessary to make a check and remove the determined causes. If transmission cannot x be interrupted, then uncover the air oil filters covers without delay, thereby lowering the air flew resistance and the temperature in the rectifier rack will drop.

When any suspicious odor is felt in the radio van, particularly an odor which remines one of the sulphur, it is necessary to first check the voltage on the terminal board, of block 4 with a portable voltmeters; if the voltage determined by the meter does not correspond to the normal voltage value, it is necessary to quikkly unscrew the screws and pull out the partiwcular block and by hand mk check the temperature of all selenium columns and closely impact the suspicious ones. Blisters and colored strooks on the selenium elements are on indication of a damaged element.

SECRET
NO FOREIGN DISSEM
Declassified in Part - Sanitized Copy Approved for Release 2013/10/18 : CIA-RDP80T00246A071100330001-5

Declassified in Part - Sanitized Copy Approved for Release 2013/10/18 : CIA-RDP80T00246A071100330001-5
NO FOREIGN DISSEM

50X1-HUM

In such a case the damaged column must be replaced by a new one from the spares of the radio communication unit.

Where the columns are connected in parallel the columns will heat much more evenly, since the damaged column will be less loaded. If the columns are connected in series and they are short-circuited, they will not overheat either. Therefore when overheating of the rectifier columns is determined, the quality of all columns forming the system must be thoroughly checked.

If no external damage is determined on the columns, they are tested in the following manner:

The 26V rectifier is tested unloaded and the rectified voltage must be at least 30 V.

The correct operation of the columns built in groups is determined by checking the current of the individual parallel branches by applying to them 30 V. d.c. from a storage battery. The voltage may be applied with the test probes. During this test the current flowing through the 1,35 kV rectifier columns should be 1,5 amps; the current flowing through the 600 V and 300 Volts rectifiers columns must be at least 0,5 amps. To eliminate errors in determining the ~~[illegible]~~ forward and reverse disection, it is adviseable to touch the columns of each groups twice with the test probes, and this to apply the voltage in both directions.

When replacing the blocks with the selenium column; watch the proper positioning and the proper tightening of the fastening screws which insure the proper contact of the blocks with the connecting panel (terminal board).

SECRET
NO FOREIGN DISSEM
Declassified in Part - Sanitized Copy Approved for Release 2013/10/18 : CIA-RDP80T00246A071100330001-5

Declassified in Part - Sanitized Copy Approved for Release 2013/10/18 : CIA-RDP80T00246A071100330001-5
NO FOREIGN DISSEM

50X1-HUM

When inserting the rectifier blocks into the rectifier rack, it is necessary to check whether the knife contacts make good contact. Should the spring contacts on the panels be spread, then it is necessary to repair them by pressing the steal springs together.

When faults occur in the rectifiers, it is necessary to follow the instructions for fault location. In case that faults are discovered which cannot be removed by the radio van personnel, then the repair must be performed in repair shops.

2. Care of the BC3 - 1 charger rectifier.

The charger rectifier is connected only during the charging of the storage batteries. During the operations of the charger rectifier the changing current must x be followed on the ammeter on the rectifier panel and the current must be maintained at 11 to 115 amps. over a six hour period. It is not recommended to charge the batteries with smaller currents. The gastest charging is at 11 amperes.

If, while charging, the ambient temperature is over +25° C, it is necessary to turn on the ventilation, for otherwise the selenium columns will overheat.

After the batteries have been charged, turn off the rectifier Other tasks are not performed after turning off the rectifier.

Care of the rectifiers lies in its regular inspection and in cleaning of the rectifier must be performed with the supply turned off, with "_____"("power line- power plant") selector switch on the BCP - 6 rectifier block x 5 panel in the " "_____"("off") position.

3. Care of the distribution cabinet.

Care of the distribution cabinet is limited to regular inspection, cleaning and checking of the relay contacts from dust. The distribution cabinet is easily removable from its housing after unscrewing the screws on the panel. When inserting the panel back into the housing make sure that the knife contacts make good contact.

SECRET
NO FOREIGN DISSEM
Declassified in Part - Sanitized Copy Approved for Release 2013/10/18 : CIA-RDP80T00246A071100330001-5

Declassified in Part - Sanitized Copy Approved for Release 2013/10/18 : CIA-RDP80T00246A071100330001-5
NO FOREIGN DISSEM

4./ Care of the control line rectifier.

This rectifier does not require any particular care with the exception of cleaning of the dust. During its inspection the voltage must x be turned off by means of the switch on the BCP - 6 rectifier block x 5 panel, since the control line rectifier proper does not have its own switch and thus may be under potential al all times.

Care of the BC - 2 rectifier.

When connecting the rectifier, make sure that the position of the switch corresponds to the nominal voltage of the power line. When the rectifier operates at ambient temperatures is excess of +24°C, it is necessary to remove the covers which cover the top and the bottom openings of the selenium elements and also to uncover the openings on the front/side walls. During operation the rectifier must horizontal. When the rectifier supplies the remote control apparatus, make sure that the openings for cooling of the selenium elements are not too elose to the ground in order not to block the natural ventilation, It is not recommended to remove the main rectifier cover unless absolutely necessary.

6. Care of the B... - 10 - 12 vibrator converted in the remote control unit.

The vibrator converter is designed for continuous duty and it operates satisfactorily when powered from a 10,5 to 13,5 V. power source. Since three storage batteries 4-HKH-45 M which power the remote control unit B..Y, may give as high a voltage as 15 V when freshly charged, it is necessary to reduce this voltage. To reduce the voltage which is supplied to the vibrator converter, the dropping resistor R 606 is inserted into its circuit by the toggle switch 604 which is located on the remote control unit. Later, when the storage battery voltage drops to 13 tp 13,5 volts, this dropping resistor must be disconnected with the same toggle switch (..604) by short

NO FOREIGN DISSEM
Declassified in Part - Sanitized Copy Approved for Release 2013/10/18 : CIA-RDP80T00246A071100330001-5

Declassified in Part - Sanitized Copy Approved for Release 2013/10/18 : CIA-RDP80T00246A071100330001-5
NO FOREIGN DISSEM

The vibrator converter B..-10-12 together with its spare vibrator do not require any special adjustment before being placed into operation, but to preclude any faults, it is recommended to regularly check the converter, particularly after longer idle periods or after transportation, as well as before moving far away from repair shops.

The operating readiness of the vibrator converter is fundamentally given by the state of the storage batteries. Besides regularly charging the storage batteries, they must be periodically rid of dxids products and salts. It is necessary to remember that oxidation of the straps (under the nuts) which interconnect the storage batteries is directly proportionnal to the increase in the internal resistance of the current source. This undesirable for the operation of the apparatus. The maintenance of the storage batteries must be performed according to the respective instructions.

1 - 5. Removal and replacement of the sections and blocks of the transmitter and BCP - 6., rectifier.

1. Removal of the sections and blocks from the racks.

To enable the performance of inspection and maintenance repairs of the transmitter and of the BCP-66 rectifier which supplies the transmitter, the sections and blocks must be removed from the racks and when doing this, the following rules must be maintained:

The transmitter:

1. To remove the audio frequency section, unscrew the four bolts which hold the section in the rack. Grasp the handles of the central control unit panel and pull the section toward yourself. Since the blocks of the section have a greater number of contacts, it is necessary, after removal of the section from the rack, to manipulate carefully with the section.

2. The removal of the high frequency section may be performed only after the removal of the audio frequency section and it is necessary to:

1) disconnect the high frequency cables (feeders) from the

SECRET
NO FOREIGN DISSEM
Declassified in Part - Sanitized Copy Approved for Release 2013/10/18 : CIA-RDP80T00246A071100330001-5

Declassified in Part - Sanitized Copy Approved for Release 2013/10/18 : CIA-RDP80T00246A071100330001-5
NO FOREIGN DISSEM

reception-transmission relay block and remove them from the rack;

2) unscrew four bolts which hold the section in the rack;

3) slide the section out along the rails;

4) two persons grasp the base of the section from two sides and remove it from the rack.

3. To be able to remove the transmitter vacuum tube filament transformer block from the rack, it is first necessary to remove the lower doors which cover the block, to unscrew the four bolts which hold the block in the rack, to insert a band into the front panel opening and to slide the block out.

The BGP-6,, rectifier:

Unscrew all bolts which fasten the blocks to the rack.

1. The removal of the block # 5 (the uppermost one) must be performed carefully, since the block is placed rather high above the floor, and since it is heavy. It is not correct to remove the block with a strong jerk, since the block might tilt and slide out of the rack of its own accord and fall out completely.

The other blocks are removed with less effort, since they are lighter and are located lower in the rack; however, be just as careful during their removal as in the case of the removal of the block # 5.

SECRET
NO FOREIGN DISSEM
Declassified in Part - Sanitized Copy Approved for Release 2013/10/18 : CIA-RDP80T00246A071100330001-5

Declassified in Part - Sanitized Copy Approved for Release 2013/10/18 : CIA-RDP80T00246A071100330001-5
NO FOREIGN DISSEM

50X1-HUM

2. Replacement of the section and blocks into the rack.

The replacement of the transmitter and BCP - 6 rectifier section and blocks into the racks must be also performed carefully. Slowly place the units into the rack, but slide the knife contacts rapidly into their receptacles to insure complete insertion of the knife contacts into the receptacle spring contact/terminal boards/ and to insure dependable good contacts.

Should the knife contacts be slid in slowly, the knife contacts will not enter fully and as a result of thism the section or block will arise between the knife contacts and the spring contacts.

11 - 6. Care of the telescopic tower.

The service readiness of the telescopic tower is dependent on the care given it.

Care for the telescopic tower in the following way:

1/. The steel cables, the pullly, the shafts, the outer surfaces of washers, the outer and inner surfaces of all movable sections, the inner surface of the steel section and all parts of the raising mechanism must be lubricated at all times with ..... - 5½ or A ø - 70 lubricant.

2./ Whenever the tower is lowered and without the antenna equipment, it must be protected with a cloth cover.

3./ It is forbidden to place the tower on clay or sand. It is recommended to place it on a wooden platform of any kind.

Besides this make sure that:

1./ the section brackets be properly tightened and that they cannot rotate around the re-inforcement rings.

2./ all the pulleys in the brackets turn freely on their shafts.

SECRET
NO FOREIGN DISSEM
Declassified in Part - Sanitized Copy Approved for Release 2013/10/18 : CIA-RDP80T00246A071100330001-5

Declassified in Part - Sanitized Copy Approved for Release 2013/10/18 : CIA-RDP80T00246A071100330001-5
NO FOREIGN DISSEM

50X1-HUM

3./ the steel cables are fastened in the upper or center openings of the brackets (it is not permitted for the sections to have any play when the tower is being raised due to improperly tensioned guy cables;

4./ raining cable eyelets be free in the brackets and that the cables are not stretched:

5./ the double and cables be of equal lenght;

6./ the raising mechanism function smoothly (without galling);

7./ the force necessary for the turning of the raising mechanism crank during raising or lowering of the tower with the antenna equipment does not exceed these values:

At the beginning of the raising operation - not more than 16 kg.
at the end of the raising operation - " " " 30 kg.
when lowering - " " " 3 kg.

8./ the water drainage openings in the first section are always.free.

After raising the tower 200 times inspect the conditions guy cables. Should it be found that 20% of the strands (of all of the cable strands) are damaged, the guy cable must be replaced with a spare cable.

11 - 7. Lubrication of sliding surfaces of the radio communication unit sections and blocks.

All of the radio communication unit parts listed in the lubrication table must be lubricated. (see table 11 - 1).

SECRET
NO FOREIGN DISSEM
Declassified in Part - Sanitized Copy Approved for Release 2013/10/18 : CIA-RDP80T00246A071100330001-5

Declassified in Part - Sanitized Copy Approved for Release 2013/10/18 : CIA-RDP80T00246A071100330001-5
NO FOREIGN DISSEM

50X1-HUM

T A B L E 11-1.

Lubrication table.

of sliding parts of the radio communication unit sections and elements/with the exception of the engine and automobile parts of the radio van/.

Number.	Place of lubrication.	Grade of lubricant.	Maintenance period
1.	2.	3.	4.
1.	In the transmitter, rectifier BCP-66, BC3-1, BC.-2, in the distribution cabinet in the common panel of both receivers, in the auxilliary receiver control panel, in the dynamic loudspeaker amplifier, in the connecting line panel and in the remote control unit B....Y.		
	selector,switch contacts.	.....-54,...-70 and other.	once a month (during the compulspry maintenance
2.	In the transmitter and BCP-66 rectifier racks, in the housing of the distribution cabinet.		
	guide rails.	.....-54,----70 and other.	every 1/4 of a year (during the compulsory maintenance.
3.	In the electromechanical automat.	"....."	"time delay
1.	Worn shaft of the electrical motor.	.....-54,....-70 and other.	After 250 hours of transmitter operation and during 1/4 yearly compulsory maintenance.
2.	Worn gears (two)	-"-	-"-
	In the transmitter tuning device.		
1.	shaft bearings.	;.....	semiannually (during the compulsory maintenance.
2.	al.motor bearings.	.....	.....
3.	rear and front bearings of the cam drums at each location of all the autotune heads.		
4.	bearing of the idler gears of the autotune mechanism.		
5.	bearing of the circuit switch mechanism lead screw.		

NO FOREIGN DISSEM
Declassified in Part - Sanitized Copy Approved for Release 2013/10/18 : CIA-RDP80T00246A071100330001-5

Declassified in Part - Sanitized Copy Approved for Release 2013/10/18 : CIA-RDP80T00246A071100330001-5
NO FOREIGN DISSEM

1.	2.	3.	4.
6.	gear train of the autotune mechanism.	- " -	semiannually (during the compulsory maintenance.
7.	the thread of the limit switch mechanism lead screw in the autotune read 6.	- " -	
8.	Worms on shafts.		
9.	coupling and gear trains of the electric motor drive.		
	5. In the transmitter cable transmission.		
1.	pulleys of the first 4 stages).		semiannually (during the compulsory maintenance.
2.	steel cables.		
	6. In the cable transmission of the 5th.transmitter stage.		
1.	bearing of the coupling of the larger pulley.		semiannually (during the compulsory main tenance.
2.	the larger and the smaller pulleys.		
3.	the steel cable.		
	7. In the cable transmission of the 6th.transmitter stage.		
1.	the larger and the smaller pulleys.		semiannually (during the compulsory main tenance.
2.	the steel cable.		
	8. On the telescopic tower.		
1.	the outer and inner surface, of the movable section and the inner surface of the stationery section.	....-54,;;..-70 and other nonfreezing lubricant.	after raising the tower 60-70 times and during 1/4 yearly compulsory maintenance.
2.	the steel cables.		
3.	the shafts of all bracket pulleys.		
4.	the shaft of the braking mechanism.		
5.	the shaft of the drum.		

Declassified in Part - Sanitized Copy Approved for Release 2013/10/18 : CIA-RDP80T00246A071100330001-5

Declassified in Part - Sanitized Copy Approved for Release 2013/10/18 : CIA-RDP80T00246A071100330001-5
NO FOREIGN DISSEM

50X1-HUM

1.1	2/	3.	4.
6. the radio mechanism components.	.....-54, ...-70 and other nonfreezing lubricants.	after raising the tower 60-70 times and during 1/4 yearly maintenance compulsory.
7. the pulley in the base of the second section.		
8. outer durfaces of excentris rings		
9. On the directional antenna of the wave channel "....." type.		
1. the bracket of the radiator.		semiannually (during the compulsory maintenance.

SECRET
NO FOREIGN DISSEM
Declassified in Part - Sanitized Copy Approved for Release 2013/10/18 : CIA-RDP80T00246A071100330001-5

Declassified in Part - Sanitized Copy Approved for Release 2013/10/18 : CIA-RDP80T00246A071100330001-5
NO FOREIGN DISSEM

50X1-HUM

The lubricant must be water resistant and fressing resistant. Such lubricants are the grades, ... and others.

1./ Lubrication of the selector switches.

The contacts of all selectors switches in the various radio communication unit.

elements must be inspected at least once in a month.

If any burning or corrosion appaars on the contacts, they must be washed with alcohol and lubricated by applying a thin layer of non freezing lubricant ..ON - 54 or AØ - 70 in such a way that the lubricant will not get oh the insulation between the contacts.

2./ Lubrication of the electromechanical time delay ("..... ....."/automat sliding component.

The electro mechanical time delay automat sliding part must be lubricated after every 250 hours of transmitter service.

To be able to lubricate the partsm these operations must proceeds:

1. Remove the transmitter second section and the filament transformer block from the transmitter rack.
2. Throught the opening in the front wall of the time delay automat housing apply the lubricant with a small brush to the worm of the el.motor and for shaft, and on the worm transmission of the time delay automat which is connected with this worm and through the bottom opening in the housing apply the lubrieant with a stick to the second worm transmission of time delay automat (which is coupled to the transmission worm.)
3. Replace the transmitter second section and filament transformer block back into the transmitter rack.

SECRET
NO FOREIGN DISSEM
Declassified in Part - Sanitized Copy Approved for Release 2013/10/18 : CIA-RDP80T00246A071100330001-5

Declassified in Part - Sanitized Copy Approved for Release 2013/10/18 : CIA-RDP80T00246A071100330001-5
NO FOREIGN DISSEM

50X1-HUM

It is not permitted to remove the ..... from the cover fastened on the electric motor of the ventilator.

3./ Lubrication of the transmitter and receiver automatic tuning mechanism.

When the radio communication unit is used very frequently, lubricate the transmitter and receiver automatic tuning mechanism at least semi-annually.

When the radio communication unit is conservaded or used only seldom, lubricate once in a year.

The following parts of the automtuning mechanism must be lubricated:

In the transmitter.

1. All shaft bearing;
2. the el.motor bearings;
3. the roar and the front can drums bearings in each autotune head.
4. the bearing of the idler gear;
5. the bearing of the lead screw;
6. the pinione of the gear trains in the autotune heads;
7. the throad lead screw;
8. ~~the~~ all worms on the shafts;
9. the couplings and pinione of the electric motor transmission

It is strictly forbidden to lubricate the ratchets, spring washers and friction clutches of the autotune in the receiver. The special openings in the levers (push-rods).

4). Lubrication of the sliding parts in the cable transmission block and of the cable transmissions in the 5th.and 6th.stages.

SECRET
NO FOREIGN DISSEM
Declassified in Part - Sanitized Copy Approved for Release 2013/10/18 : CIA-RDP80T00246A071100330001-5

Declassified in Part - Sanitized Copy Approved for Release 2013/10/18 : CIA-RDP80T00246A071100330001-5
NO FOREIGN DISSEM

The sliding parts in the cable transmission block and in the cable transmission of the 5th.(on the block of the 5th.stages) and 6th.~~xx~~ inside on the front wall of the frame of the 1st section) stages are lubricated at least semi-annually (during compolsury maintenance).

The following parts are lubricated:

In the cable transmission:

1.) the pulleys of the first four transmitter stages;

2.) the cables.

In the 5th.stage cable transmission:

1.) the bearing of the larger pulley coupling (on the condenser rotor shaft of the 5th.stage);

2.) the larger and the smaller pulleys.

3.) the cable.

In the 6th.stage cable transmission:

1.) the larger and the smaller pulleys.

2.) the cable.

To be able to perform the lubricating, the first section must be removed from the transmitter rack and the lubricant is then applied with a small brush to the listed details.

In the cable transmission block lubricate one pulley of the 1st.stage from the left hand side of the block, whereas lubricate the second pulleys of the 1st.stage, the pulleys of the second stage and two pulleys of the 3rd.stage through the cut-out for the quartz crystals in the front wall of the 1st.section frame, lubricate one pulley of the 4th.stage from the right hand side from the outside and the second pulley of the same stage lubricate from the ~~x~~ top side of the block. Simultaneously lubricate the accessible parts of the cables.

SECRET
NO FOREIGN DISSEM
Declassified in Part - Sanitized Copy Approved for Release 2013/10/18 : CIA-RDP80T00246A071100330001-5

Declassified in Part - Sanitized Copy Approved for Release 2013/10/18 : CIA-RDP80T00246A071100330001-5
NO FOREIGN DISSEM

50X1-HUM

5.3 Partial dis-assembly and lubrication of the telescopic tower.

During the raising of the tower the lubricant is spread on all of its sliding parts. Therefore it is necessary to see to it that no individual parts should rub (slide) on dry surfaces.

This may be watched on the outer surfaces of the movable section in such cases on the outer surfaces is a wall adhering dry layer of dust and other particles from the air. Therefore the sliding of the sections is at first very stiff and the necessary effort on the crank of the winch visibly increases. This becomes evident on the raising cables, since their tension increases and may at first lead to breaks of individual strands and later to breaks of whole cables.

To insure smooth normal work with the telescopic towerm it is recommended to renew the lubricant on all sliding surfaces after every 60 or 70 raisings of the tower.

The old lubricant is removed with a cloth dipped in gasoline (petrol) or kerosene.

The fresh lubricant should be applied only to x clean and dry surfaces.

The lubrication and partial diasassembly of the tower is performed in the following way:

1./ lower the tower.

2./ Remove the tower from the radio van or from the base plate and lay it on wooden supports. Two to three men are needed to remove the tower.

3./ Remove any rust all outer surface of the tower.

4./ Unscrew the bolts holding the base of the first (stationary)

SECRET
NO FOREIGN DISSEM
Declassified in Part - Sanitized Copy Approved for Release 2013/10/18 : CIA-RDP80T00246A071100330001-5

Declassified in Part - Sanitized Copy Approved for Release 2013/10/18 : CIA-RDP80T00246A071100330001-5
NO FOREIGN DISSEM

section, remove the base and renew the lubricant of the pulley in the base of the second section.

5.) Remove the eylet of the raising cable from the bracket of the first section of the tower by turning the bolt by which this eylet is held and remove the bolt from the bracket.

6.) Fasten the circular holder into the freed cable eylet and pull the cable by it and lift the second section (movable one). (When doing this make sure that the axis of the sections remain in one line). Place a support under the sections raised with the second section.

7.) Remove the old lubricant from the surface of the raised section, from the cable surface and from the puter surface of the stationary section. While doing this inspect are not damaged and whether the number of strands (of all strands of the cable(.Then apply fresh lubricant. When the number of damaged strands ~~xxx~~ exceeds 20% of the total number of strands such a cable must be replaced by a cable from the spares.

8.) Unscrew the bolts holding the cover of the winch, remove the cover and remove the old lubricant from all parts of the winch. By meuns of an automobile grease .... lubricate all lubricating openings on the shafts of the pulleys of the 1st. and 2nd. section buckless and in the gear transmission of the winch. Remove the lubricant which flows out of the winch lubrication openings. Apply fresh lubricant to all parts of the winch.

9.) Slide the movable sections in the stationary one and simultaneously keep the cable tensioned at all times to prevent

Declassified in Part - Sanitized Copy Approved for Release 2013/10/18 : CIA-RDP80T00246A071100330001-5

Declassified in Part - Sanitized Copy Approved for Release 2013/10/18 : CIA-RDP80T00246A071100330001-5
NO FOREIGN DISSEM

it from twisting or catching inside the sections. As soon as the cable inside the first section is properly placed (the cable should be on the pulley in the base of the second section), place the base of the first section in its place and fasten it with screws. Fasten the loop of the winch cable to the bracket of the first section.

10./ In the bracket of the first section loosen the two eylets of the 3rd.section cable by unscrewing the nut from the bolt on which the eylets are and remove the bolt from the bracket.

11./ Place the circular holder into the freed eylet of the 3rd, section cable and by pulling the holder withdraw the 3rd.section (and place a support under the sections withdrawn together with the 3rd.section).

12./ Remove the old lubricant from the surfaces of the extended section and cable and apply fresh lubricant. Inspect the cable before lubricating it, and if the number of damaged strands exceeds 20% of the total numbers of strands, replace the cable by a new one from the spares. Apply fresh lubricant to the lubricating openings of the pulleys shaft in the bracket of the section.

13./ Slide the 3rd.section (together with the 4th., 5th., 6th., 7th., 8th., and 9th.) back into the 2nd.section and simultaneously keep the cable tensioner. Fasten the 3th.section cable in the bracket of the 1st section.

14./ Successively lubricate the other movable sections (the 4th., 5th., 6th., 7th., 8th., and 9th.). The lubrication procedure of these sections is the same as when lubricating the 3rd.s section. Keep in mind that the cable-eylets of the 4th.section are fastened to the bracket of the 2nd.section, the cable eylets of the 5th.section to the bracket of the 3rd.section etc.

SECRET
NO FOREIGN DISSEM
Declassified in Part - Sanitized Copy Approved for Release 2013/10/18 : CIA-RDP80T00246A071100330001-5

Declassified in Part - Sanitized Copy Approved for Release 2013/10/18 : CIA-RDP80T00246A071100330001-5
NO FOREIGN DISSEM

50X1-HUM

15./ After fasrening the cable eylets of the uppermost 9th. section make an external inspection of the tower and determine wheter it is properly assembled. Remove the excessive lubricant from the painted parts of the tower.

16./ Make a trial set up of the lower equipment by raising the antena to the full extention of the tower.

If excessive effort must be used on the crank of the winch during the raising of the tower with the antenna equipment and if squeeking or crackling, etc. occures, it is an indication that the lubrication was not properly performed and that the shortcommings must be corrected.

11 - 8. Care of the radio communication unit when it is operating at high or low ambient temperatures.

The proper operation of the radio communication unit at ambient temperatures below 0° C and above $+40^{\circ}$C depends on a nunber of factors which strongly influence the service readiness of the unit. Careless operation at high ambient temperature may result in dangerous overheating of the individual parts of the radio communication unit whereas during operation below 0°C moisture may condense/in the form of dew. on the cold surfaces of the equipment.

In both cases the resistance and the dielectric strength of the insulation of the conductive parts of the radio communication unit is reduced, as well as the mechanical quality of its components.

If the supplementary rules for the care of the radio communication unit under extreme ambient temperatures are not adhered to, the listed reasons may result in breakdowns of insulation, damage and errors in the function of the radio communication unit.

When radio communication unit is pressed into service under such conditions, follow the instructions listed below:-

SECRET
NO FOREIGN DISSEM
Declassified in Part - Sanitized Copy Approved for Release 2013/10/18 : CIA-RDP80T00246A071100330001-5

Declassified in Part - Sanitized Copy Approved for Release 2013/10/18 : CIA-RDP80T00246A071100330001-5
NO FOREIGN DISSEM

1). Operating the r.c.u. at ambient temperatures above +40°C.

To support the cooling of the ... - 7 vacuum tubes and of the crystal switching relay and of other components, performed the following operations before turning the r.c.u.

1.) Remove the front door of the transmitter.

2.) Remove the doors that cover the openings in the slide walls, of the transmitter rack and short circuit the door interlock switches on these walls which are in the high voltage control circuits. (Be carefull that the short circuiting wires do not touch the walls of the rank).

3.) Remove the side walls from the frame of the block of the first four stages.

4.) Clean the air-oil filters in the air cooling system of the .. - 7.. transmitter vacuum tubes and selenium column rectifier BCP - 6.. When the air is not polluted with dust remove these filters from the transmitter rack and from the BCP - 6.. rectifier blocks.

During operation of the r.c.u. it is necessary:

1. To clean the air oil-filters twice as often as usually, i.e. after every 20 hours of service.

2. In case of overheating of the selenium elements of the 26V rectifier in the BCP - 6.. rectifier (this overheating is signalized by the "_____"("overheating") pilot lamp on the front panel of the BCP - 6 rectifier block x 4) and if it is necessary to prolong the operation of the r.c.u., remove the air oil filter from the BCP - 6 rectifier block.

3. In case of frequante operation of the overload relay of the 1,35 V. rectifier (this operation is indicated by the "_____"("1,35 x V overloading") pilot lamp

r.c.u.= radio communication unit.

NO FOREIGN DISSEM
Declassified in Part - Sanitized Copy Approved for Release 2013/10/18 : CIA-RDP80T00246A071100330001-5

Declassified in Part - Sanitized Copy Approved for Release 2013/10/18 : CIA-RDP80T00246A071100330001-5
NO FOREIGN DISSEM

50X1-HUM

on the front pabel of the BCP - 6 rectifier block 1) and if it is necessary to continue the operation of the r.c.u., it is necessary to switch to the reduced power operation (10 - 40%).

4.) Every week inspect and lubricate the components in r.c.u. sections and blocks.

5.) Charge the storage batteries only when the ventilator of the BC .. - 1 charging rectifier is operating.

6.) To ..... the cooling of the transmitter, start the ventilator in the left wall of the radio van, uncover the window in the right hand side wall of the van and close the window in the left hand side wall as well as the door.

2). Operation of the r.c.u. at temperatures below 0°C.

To prevent the condensation of moisture on the r.c.u. equipment raises the temperature inside the radio van only by the heat radiated by the transmitter. For this purpose operate the transmitter without high voltage for 30 minutes before commencing communication. The transmitter and the BCP - 6.. rectifier are thereby dried out by the air which is circulated by the ventilators (the air cooling system) which are located in the transmitter and BCP - 6.. rectifier racks.

The use of the electric heater and the heating of the wood burning stove is permitted only at temperatures above 0°C inside the radio van. During intermissions of the r.c.u. operation the temperature inside the radio van must be maintained at least at + 10°C by the electric heater and/ or the wood burning stoves.

If the transmitter is operating , the temperature inside the radio van must be maintained only by the electric heater,

r.c.u. = radio communication unit.

SECRET
NO FOREIGN DISSEM
Declassified in Part - Sanitized Copy Approved for Release 2013/10/18 : CIA-RDP80T00246A071100330001-5

Declassified in Part - Sanitized Copy Approved for Release 2013/10/18 : CIA-RDP80T00246A071100330001-5
NO FOREIGN DISSEM

50X1-HUM

because the BCP - 6 ventilator sucks the air out of the radio van and were the stove used simultaneously, it would not have any draft and smoke would come into the radio van.

NO FOREIGN DISSEM

Declassified in Part - Sanitized Copy Approved for Release 2013/10/18 : CIA-RDP80T00246A071100330001-5

Declassified in Part - Sanitized Copy Approved for Release 2013/10/18 : CIA-RDP80T00246A071100330001-5
NO FOREIGN DISSEM

50X1-HUM

CHAPTER 12.

COMPULSORY MAINTENANCE.

12 - 1. General Instructions.

To insure trouble free service of the radio communication unit certain compulsory maintenance operations must be regularly performed besides the care of its equipment and auxiliaries.

The compulsory maintenance is divided into monthly, quater-annual, semi-annual and annual ones.

The main points of the compulsory maintenance operations are the following:

1). A check of the completeness of the radio communication unit.

2). Mechanical inspection of the radio communication unit sections.

3). Removal of the discovered defects.

4). Electrical test of the rdcio communication unit elements.

5). Smaller repairs.

6). Completion of technical documentation.

All work performed during the repair of the individual elements or replacement of components that failed during service must be clearly noted in radio communication unit log-book.

When performing the compulsory maintenance operations the radio communication must be caouflaged and the work in the

SECRET
NO FOREIGN DISSEM
Declassified in Part - Sanitized Copy Approved for Release 2013/10/18 : CIA-RDP80T00246A071100330001-5

Declassified in Part - Sanitized Copy Approved for Release 2013/10/18 : CIA-RDP80T00246A071100330001-5
NO FOREIGN DISSEM

50X1-HUM

radio should be as short as possible.

The elements must be transported by means of hand-trucks, electric trucks, etc.

12 - 2. Checking the completenes of the radio communication unit equipment.

A thopough check of the completenoss of radio communication unit equipment is imperative. The lose of individual components of the equipment may prevent a quick elimination of faults by the forces of the attending personel. It is recommended to simultaneously with the completeness check inspect the state of the equipment as far as quality is concerned. Vacuum tubes that are not capable of service replace with new ones.

12 - 3 Mechanical Inspection of the Radio communication Unit elements.

The main purpose of the mechanical inspection during the compulsory maintenance are the following :

1). To determine the causes of the individual faults which appeard during the service of the radio communication unit elements.

2). To determine the deterioration of mechanical connections (screws, rivats, etc.) of the various compônents in the elebents, determination of damaged covers, discovery of corrosion, incorrect state of contacts, damaged ~~nut~~ plating, damaged shielding and insulation, the state of the storage batteries,

NO FOREIGN DISSEM
Declassified in Part - Sanitized Copy Approved for Release 2013/10/18 : CIA-RDP80T00246A071100330001-5

Declassified in Part - Sanitized Copy Approved for Release 2013/10/18 : CIA-RDP80T00246A071100330001-5
NO FOREIGN DISSEM

50X1-HUM

the state of lubrication of the mechanism etc.

3.) To check the service readiness of the telescopic tower.

The mechanical inspection must be performed with utmost care and thoroughness.

It is not permitted to make the mechanical inspection if the conductive elements of the radio communication unit are under power. Care must be taken during the inspection, not to injure the equipment (by bending the conductors, breaking cables, interchange of elements such as condensers, resistors, circuit loops, induction coils, etc.) by dropping or impact.

The extent of the mechanical inspection is given by the time schedule of the compulsory maintenance operations.

12 - 4. Elimination of mechanical defects.

During the compulsory maintenance it is permitted to remove only such defects which are determined and whose method of removal is absolutely clear and is within the scope of the personel performing the compulsory maintenance and under the conditions that it is possible to make the repairs with the tools of the radio communication unit. Otherwise the repair should be made as far as possible in a repair shop, since an unqualified repair may put the radio communication unit out of service for a longer period of time.

The main operations in removing mechanical defects are:

SECRET
NO FOREIGN DISSEM
Declassified in Part - Sanitized Copy Approved for Release 2013/10/18 : CIA-RDP80T00246A071100330001-5

Declassified in Part - Sanitized Copy Approved for Release 2013/10/18 : CIA-RDP80T00246A071100330001-5
NO FOREIGN DISSEM

1. Tightening and locking screw connections.
2. Tightening of rivet.
3. Cleaning or washing out components which suffer from corrosion or rusting.
4. Painting of bare surfaces.
5. Removal or repair of insulation.
6. Adjustment of contact springs.
7. Cleaning and washing of contacts of selector switches, plugs (terminal boards), connectors etc.
8. Removal of old lubrication and application of fresh lubricant.
9. Replacement of damaged individual components.
10. Blowing out with clean compressed air.
11. Sewing of torn tarpaulin.
12. Cleaning of the converter components or units from the spares (selenium columns, relays, chokes, resistors, condensers, vacuum tubes, telescopic tower, steel cables, etc.
14. Washing of air oil filters.

The great variety of the listed operations requires that the attending personnel have a knowledge of using the respective tools (soldering irons, cleaners, screwdrivers, wrenches), since incorrect motions and inpact may cause serious damage that is difficult to repair, or may cause the detuning of the radio communication unit. Therefore the repair of the mechanical defects must be performed by experienced radio mechanics.

Declassified in Part - Sanitized Copy Approved for Release 2013/10/18 : CIA-RDP80T00246A071100330001-5

Declassified in Part - Sanitized Copy Approved for Release 2013/10/18 : CIA-RDP80T00246A071100330001-5
NO FOREIGN DISSEM

50X1-HUM

12 - 5. Electrical Testing of the radio communication Unit elements.

The rádio communication unit elements are tested in order to determine their service readiness and to determine whether all elements of the radio communication unit correspond to the technical specifications.

This tests must be performed in a predetermined sequence which must be strictly adhered to, starting with the supply sources and ending with the remote control equipment.

During the supply source test the value and stability (frequency of the a.c.) of the supply voltage must be tested both when loaded and when unloaded.

The power supplies consist of:

the .....15/8 power plant, the type BCP - 6.. rectifier. the type BC.. - 2 rectifier, the type BC/.- 1 rectifier, the control line rectifier (is the transmitter rack), the rectifier in the distribution cabinet, the storage batteries, the type PY - 45 A converters, and the type B...-10-12 vibrator converter (in the remote control unit).

Then test the illumination, its interlockingm the ж ventilation and the heating.

Next test the function of the control system in the radio van (..... central control unit and other sections) and

SECRET
NO FOREIGN DISSEM
Declassified in Part - Sanitized Copy Approved for Release 2013/10/18 : CIA-RDP80T00246A071100330001-5

Declassified in Part - Sanitized Copy Approved for Release 2013/10/18 : CIA-RDP80T00246A071100330001-5

the signal circuits, the function of the transmitter, receivers, antenna equipments, the function of the remote control of the radio communication unit from the B N Y remote control unit (over the B N Y remote control unit to radio van the connecting line) and funally, the functioning of the service telephone communication.

Chapter 13 of this manual lists a number of instructions for the procedures and methods of testing the vacuum tube filament circuits, the BCP - 6.. rectifier, the high frequency and radio frequency section of the transmitter.

While performing the testing adhers as far as possible to these instructions. During the electric tent determine the service ability of all instruments and working conditions of the individual elements of the radio communication unit. For this purpose use auxiliary testing instruments (ABC-5, U 312, the measuring element, the field strength indicator).

Before using these instruments, read their instruction manuale. Should any discrepancies or faults be found during the electrical test of any radio communication unit element, determine their causes.

12 - 6. Smaller Repairs of the Apparatus.

Smaller repairs, during the compulsory maintenance are permitted only when the causes of all abnormalities found in the function of any of the radio communication unit elements have been determined and when the methods for their removal

Declassified in Part - Sanitized Copy Approved for Release 2013/10/18 : CIA-RDP80T00246A071100330001-5

Declassified in Part - Sanitized Copy Approved for Release 2013/10/18 : CIA-RDP80T00246A071100330001-5
NO FOREIGN DISSEM

50X1-HUM

is obvious and when all possibilities for their removal exist. The smaller repairs must x be performed in the presence of representatives of the technical services command.

12 - 7. Filling in the Technical log book.-

Each compulsory maintenance must be written in the respective columns of the log - book.

12 - 8. Monthly Compulsory maintenance.

The extent of the monthly compulsory maintenance operavious is given by the degree of the use of the radio communication unit in the preceeding period and by the climatic conditions under which unit is operating.

The monthly compulsory maintenance must consists of:

1) A ~~m~~ check of the compleness of the equipment.

2) A Mechanical inspection.

3) The removal of determined defects.

4) Testing of the service readiness of the radio communication unit and its individual elements.

If the radio communication unit has been operating in the past ~~xi~~ month at least 40 hours, the following operations must be performed:

1) Blowing out of its elements with compressed air;

2) Reneval of the wet surface of the air oil filters;

3) Check of the contact function and quality of lubrication of all contacts of connectors and selectorsswitches;

SECRET
NO FOREIGN DISSEM
Declassified in Part - Sanitized Copy Approved for Release 2013/10/18 : CIA-RDP80T00246A071100330001-5

Declassified in Part - Sanitized Copy Approved for Release 2013/10/18 : CIA-RDP80T00246A071100330001-5
NO FOREIGN DISSEM

50X1-HUM

4). Check of the proper function of the contact springs of the .... - 7.. vacuum tube sockets in the 5th.and 6 th. stage blocks of the transmitter;

5). Check whether the fuse values correspond to the values in the schematic diagram;

6). Check all illuminating and pilot lamps (bulbs);

7) Check function of the illuminating interlocking,

For mechanical inspection, the following materials are required: ethylalcohol, benzene, gasoline (petrol), Aautomobile oil, clean cloths (rags), lubricaNts ....-54, A Ø - 70, AØ - 120, ... - 201 and vaseline.

The moist layer of the filters in the transmitter and in the blocks ≠≠ 1 and ≠≠ 2 or the BCP - 6 ... rectifier racks is renewed by washing the filters in gasoline or kerosene and dipping the clean filters in a 20 - 30 % solution of automobile oil in gasoline.

Wipe the surface of the shields of the 5th. and 6th. stage blocks, and the sockets of the ... - 7.. vacuum tubes and other components (componenets) which conduct high frequency currents with a clean cloth wetted with first grade ethylalcohol or benzene.

Rusted components or their parts (contacts of selector, switches, terminal boards, (plugs connectors etc.) which conduct d.c. or audio frequency current are wiped with a clean cloth dipped in benzene.

All contacts of the selectro switches terminal boards (plugs) ans connectors are after cleaning and drying lubri-

NO FOREIGN DISSEM
Declassified in Part - Sanitized Copy Approved for Release 2013/10/18 : CIA-RDP80T00246A071100330001-5

Declassified in Part - Sanitized Copy Approved for Release 2013/10/18 : CIA-RDP80T00246A071100330001-5
NO FOREIGN DISSEM

50X1-HUM

pated with a thin layer of non-freezing lubricant ...-54 or A Ø - 70 in such a way that the lubricant will not x cover the insulation between the contacts. The use of lubricants which stiffen at - 60° C is not permitted.

After blowing out the transmitter ans BCP - 6.. rectifier, after checking the state of the contacts and after removing the possible defects make a thorough mechanical inspection and check the operating readiness of all radio communication unit elements according to the results perform the repair or continue using the radio communication unit.

12 - 9. Quarter annual compulsory maintenance.

Besides the monthly prescribed operations in addition perform the following operations during the quarter annual compulsory maintenance:

1) Check the regularly and extent of the monthly compulsory maintenance.

2) Lubricate the sliding, parts of the electromechanical "....."("Time delay") automat.

3) Renew the lubricant of the telescopic tower parts.

4) Performs an electric test.

5) Perform the small repairs.

Instructions for the lubrication of the sliding parts of the electromechanical "....."("time delay") automat and for the renewal of the telescopic tower lubricant were given above in chapter 11, paragraph 11 - 7 sub. 2 and 5.

SECRET
NO FOREIGN DISSEM
Declassified in Part - Sanitized Copy Approved for Release 2013/10/18 : CIA-RDP80T00246A071100330001-5

Declassified in Part - Sanitized Copy Approved for Release 2013/10/18 : CIA-RDP80T00246A071100330001-5
NO FOREIGN DISSEM

50X1-HUM

All basic elements of the radio communication unit must undergo an electrical test.

During this test evaluate the performance of the 8 various elements with the instruments built into these elements.

Use the portable instruments only when absolutely necessary.

12 - 10. Semi - annual Compulsory Maintenance.

The semi annual compulsory maintenance includes the full range of the quarterannual maintenance and in addition to these also the lubrication of the sliding parts in the automatic turning and cable transmission blocks and of the 5th. and 6th. stage cable transmissions.

Lubricating instructions were given above in chapter 11 paragraph 11 - 7 sub. 3 and 4.

The electrical test of all of the radio communication unit elements must be thoroughly performed using all means available for this test. Before checking the operating condition of the radio communication unit test the accuracy of the meters on the individual panels of the elements with the portable meter.

12 - 11. Annual Compulsory Maintenance.

Besides the semiannual compulsory maintenance the annual one includes in addition the following:

1) Renewal of the radio van and the trailer sueface finish (the body, the driver's cab and the motor).

SECRET
NO FOREIGN DISSEM
Declassified in Part - Sanitized Copy Approved for Release 2013/10/18 : CIA-RDP80T00246A071100330001-5

Declassified in Part - Sanitized Copy Approved for Release 2013/10/18 : CIA-RDP80T00246A071100330001-5
NO FOREIGN DISSEM

50X1-HUM

2). Review of the use of the radio communication unit during the past year and determination of the date when the radio communication unit will be turned over to the main repair shops for overheating.

C H A P T E R 13.

MAIN METHODS OF DETERMINING DEFECTS OF THE RADIO COMMUNICATION UNIT AND THEIR REMOVAL.

In addition to the meters built into the equipment the radio communication unit is equipped with the following special measuring instrument:

The test (TT - 1) or the ampere-volt-meter ABO-5, voltampermeter 31 , field strength meter, and the measuring instrument for the PC - 3M receivers. With these instrument and with the necessary knowledge about the radio communication unit it is possible to determine any defects of the radio communication unit.

For locating the defects a knowledge of the interaction of the radio communication unit elements is necessary. Then it is simple to determine which element is not operating correctly and the defect can be determined by refering to the schematic diagram. The first phase of trouble-shooting is a continuity check of the respective fuses and of the vacuum tube filaments.

13 - 1. Vacuum tube filament circuit test.

When the radio communication unit is powered from an a.c. power line, start by testing the voltages of all 3 phases by means of the selector switch and the voltmeter on the BCP - 6 rectifier block ## 5 panel.

SECRET
NO FOREIGN DISSEM
Declassified in Part - Sanitized Copy Approved for Release 2013/10/18 : CIA-RDP80T00246A071100330001-5

Declassified in Part - Sanitized Copy Approved for Release 2013/10/18 : CIA-RDP80T00246A071100330001-5
NO FOREIGN DISSEM

When the voltage of all 3 phases is checked, press the "_____"/"radio communication unit"/ "BK..."/"on"/ push button on the central control unit panel and test the value of the filament voltages of all transmitter vacuum tubes. To do this connect the ... 312 instrument successively to the 3 pairs of jacks on the filament transformer block, having first set the instrument selector switch to the " "/"a.c."/ position, and then to the desired voltage scale. If the block, is in good order, the voltage should be 13 to 13,5 volts. In case that the voltage of any pair of jacks is lower, or higher, or that there is no voltage at all, look for the trouble in the filament transformer block. Remove the block and test it with the TT-1 instrument/adjusted to operate as a ohm.meter/, according to the main schematic diagram.

A lowered voltage in the filament transformer block is caused by a breakdown of the stabilizing condensers. To determine which condenser winding and also disconnect their common leads, and only then test the condenser. The condenser which shows a short circuit when checked with the ohm.meter is the faulty one. The broken down condenser must be replaced by a new one from the spares.

An increased voltage of the filament transformer block is caused by an open circuited stabilizing choke; the test is performed by means of the TT-1 instrument whose leads are connected to the winding of the choke, and if the meter indicates an infinite resistance, it will be a proof of a faulty choke.

If on one pair of the jacks is no voltage at all, it is caused by an open circuit of the filament transformer primary

NO FOREIGN DISSEM
Declassified in Part - Sanitized Copy Approved for Release 2013/10/18 : CIA-RDP80T00246A071100330001-5

Declassified in Part - Sanitized Copy Approved for Release 2013/10/18 : CIA-RDP80T00246A071100330001-5
NO FOREIGN DISSEM

50X1-HUM

From the schematic diagram it is evident that the 600 V. and 1,350 V rectifiers cannot be connected if the 300 V bias rectifier (the 300 V rectifier) is damaged and therefore, when the test indicates that there are no high voltages,look for the trouble first of all in the block 43. Remove this block and test it with the ohm/meter.

From experience the most frequent trouble in the rectifier is a breakdwon of their filter condensers. With this in view begin the check of the rectifier.

When it is determined that the filter condensers are in order, test the transformer and filter choke windings.

After making sure that all components are ....., check whether the a.c. comes to the transformer, i.e. whether the contactors 302 for switching of the high voltage functions. To do this it is possible to apply 26 volts from the storage batteries to the contacts 89 and 505 of the pulled out blocks When the winding of the contactor magnet coil is in order, its armature will close. If the armature does not close however, the contactor coil is open circuited and must be replaced.

With a functioning contactor check the contacts with an ohm.meter. In case they do not close (make contact), remove the armature from the contactor and clean the burned contact with a khife.

After making sure that the 26 V. + 300 V. and 300 V.rectifiers function properly, proceed to check the 600 V and 1,350 V. rectifiers.

All the tests are performed in the same manner as in the case of the 300 V. rectifier with the exeption of the control circuit.

Declassified in Part - Sanitized Copy Approved for Release 2013/10/18 : CIA-RDP80T00246A071100330001-5

Declassified in Part - Sanitized Copy Approved for Release 2013/10/18 : CIA-RDP80T00246A071100330001-5
NO FOREIGN DISSEM

50X1-HUM

When testing the control circuit connect one lead of the ohm/meter to the negative end of the bias block 3 and the other lead to the cahssis. A resistance of 45 ooo ohms should be obtained, which includes the resistance of the grid relay over whose contact the control circuit of the contactor/which is closed, and which also energized the 600 V. and 1,350 V is closed, and which also includes the series resistance of the relay. After making sure that this circuit is in order, check the contacts of the grid relay; if this circuit is faulty, replace the grid relay if its coil is open circuit and or ~~it~~ replace the resistor in case it should be, for some reason, burned out.

After checking the soundness of the relay circuit follow the 26 V.circuit further. First check the contact set of/the 1,35 KV overload relay, which is located in the block ≠ 1/, and then also check the contact set of the 600 V overload relay, which is located in the block ≠ 4. The two "_____" ("hàgh voltage") pilot lamps on block 3 are used for signalizing the soundness of the contactor control circuit of these rectifiers. In case the "....."("high voltage") pilot lamp lights but there is no voltage, check the contactor coil with the ohm/meter; if the coil is sound, check the contactor contacts and if necessary, clean them.

13 - 3. Transmitter high frequency section test.

After checking all rectifiers which comprise the BCP - 6 rectifier, pass on to the test of the transmitter high frequency section. Set the section switch knobs on the central

Declassified in Part - Sanitized Copy Approved for Release 2013/10/18 : CIA-RDP80T00246A071100330001-5

Declassified in Part - Sanitized Copy Approved for Release 2013/10/18 : CIA-RDP80T00246A071100330001-5
NO FOREIGN DISSEM

50X1-HUM

winding or of the leads, which is easily determined by the ohm/meter.

After testing the filament transformer block and if it is in good condition, proceed to check the BCP-6... rectifier.

This rectifier is the source of all anode voltages, a source of the grid bias and a source of 26 volts for feeding the magnet coils of all contactors, the transmitter automatic tuning device, the microphone circuit and the pilot lamps.

13 - 2. BCP - 6 .. rectifier test.

In order that possible faults in the transmitter circuits will not influence the test, disconnect the conductors 37, 50, 51, 48 and 49 from the transmitter and connect the conductur 41 to the chassis. Test the rectifier with the ...312 instrument, switched to the proper scale, and connect its leads to the respective jacks of the control terminal board on the front panel of block 4.

Bear ih mind that only the full voltage of the 26 V, + 300 V. and - 300 V rectifiers is brought out to this terminal board, whereas the potentials of the 600 V and 1,350 V.rectifiers are brought out to the terminal board reduced to one half and one 1/5 th.respectively, i.e. from the first rectifier 300 V. are brought out and from the other one 270 V. are brought out.

After testing the voltages on the jacks of the control terminal board and block # 4 and the defective rectifier is located, remove it from the rack and remove the fault by means if the schematic diagram the BCP - 6 rectifier.

SECRET
NO FOREIGN DISSEM
Declassified in Part - Sanitized Copy Approved for Release 2013/10/18 : CIA-RDP80T00246A071100330001-5

Declassified in Part - Sanitized Copy Approved for Release 2013/10/18 : CIA-RDP80T00246A071100330001-5
NO FOREIGN DISSEM

50X1-HUM

on the central control panel, as necessary, to either :

1/. The "_____"("control units") selector switch to the "_____" ("central control unit") position.

2./ The "_____"("rods of communication") selector switch to the "C" ("simplex") position.

3./ The "_____"("power") toggle switch to the 25% position.

Connect the disconnected conductors 37, 50, 51, 48 and 49 to the BCP - 6.. rectifier and disconnect the conductor 41 from the chassis. Then turn on the radio communication unit (transmitter) by setting the "_____" ("high voltage") toggle switch on the first transmitter section to the "_____") ("on") position and by pressing the "_____") "_____" ("on") push button. After two minutes elapse (the time required for the functions of the "_____" _____"("time delay") automat. one may proceed to the high freequency section test.

First of all it is necessary to make sure that all the voltages from the BCP - 6 rectifier reach the transmitter rack. For this purpose test the voltage of the jacks "_____"("voltage control") of the first section with the ...312 volt/ampere-meter.

As long as the transmitter is not tuned (the quartz crystals are not in their jacks, the voltage should have the following values (under the condition that the output of the BCP - 6 rectifier autotransformer is 220 V).

NO FOREIGN DISSEM
Declassified in Part - Sanitized Copy Approved for Release 2013/10/18 : CIA-RDP80T00246A071100330001-5

Declassified in Part - Sanitized Copy Approved for Release 2013/10/18 : CIA-RDP80T00246A071100330001-5
NO FOREIGN DISSEM

50X1-HUM

1. 270 - 320 V on the "_____" (1st.stage anode") jacks.
2. 280 - 340 V on the "_____"(2nd.and 3rd.stage anode") jacks.
3. 420 - 570 V on the "_____"(4th. stage anode jacks).
4. 30 - 70 V on the "_____"(5th.stage bias")jacks.
5. 50 - 120 V on the "_____"(6th.stage bias") jacks.

In case that these voltages are not measured as listed above (but the "_____"("high voltage") toggle switch on the first stage is on) the interlocking circuits in the transmitter rack must be disconnected by connecting the terminal 41 on the transmitter rack terminal board ...901 to the chassis.

If in this case the voltage appears, disconnect the terminal 41 from the chassis, set the "_____" ("high voltage") toggle switch on the transmitter section to the "_____" ("off") position and check the circuit with the aid of the schematic diagram fig.13-1 and the ohm. meter.

The most likely reason for the interrupted interlocking circuit are damaged contact springs of the switch ≠ 901 air cooling interlocking which is in the high voltage control circuit and is located outside the ... - 7. vacuum tube cooling system air dust.

After having found the door switch contacts in order, unscrew the boltz, which hold the second section in place

NO FOREIGN DISSEM
Declassified in Part - Sanitized Copy Approved for Release 2013/10/18 : CIA-RDP80T00246A071100330001-5

Declassified in Part - Sanitized Copy Approved for Release 2013/10/18 : CIA-RDP80T00246A071100330001-5
NO FOREIGN DISSEM

and remove the second section from the rack. Then start the ventilator and turn on the filament voltage by short-circuiting the contacts 43 and 52 of the connecting terminal board... 405 with a piece of wire.

Then check the condition of the contacts between the interlocking contact springs of the ventilator switch .. 901 with a tester or with the ohm.meter.

If the ..... - 76 vacuum/air tube cooling system functions properly and the air oil filter in the opening of the right hand wall of the transmitter rack is not clogged, but there is no contact between the springs of the ventilator interlocking switch then these springs must first be adjusted. The adjustment is made by shifting the spring holder in the relation to the flap within the cut-out for the fastening screw. In extreme cases it is allowed to bend the contact springs. When 60% of the filter is covered with a sheet of cloth or paper, etc. This is very important in case of clogging of the filter to prevent the overheating of the transmitter vacuum tubes.

After locating and removing all faults in the interlocking circuit, the contacts 43 and 52 must be disconnected and the 2nd.section must be met into the transmitters rack and the screws swhich hold it in the rack must be screwed in before turning on the transmitter.

In case that the transmitter is improperly troad or as a result of the electromechanical "_____" ("time delay") automat (premature turning on of the high

Declassified in Part - Sanitized Copy Approved for Release 2013/10/18 : CIA-RDP80T00246A071100330001-5

Declassified in Part - Sanitized Copy Approved for Release 2013/10/18 : CIA-RDP80T00246A071100330001-5
NO FOREIGN DISSEM

50X1-HUM

1. Whether the spring contacts seat on the shaft of the gear

2. the spring return action of the gear of the relay armature;

3. Whether the retusn motion spring is fastened to the armatur of the relay.

4. the condition of the cam on the holder which opens the auxilliary (normaly closed) contacts of the time delay automat which are connected is the coil supply circuit of this relay and in the tube filament contactor coil -)301 control circuit.

In case that the voltage on the jack with the inscription "_____"(5th.stage bias") and "_____" 6th. ("stage bias") is considerably higher than 250-300 V. and when the "_____" ("mode of communication") selector switch on the central center panel ..... is in the "C" (Simplex) position, it means that there is some fault in the bias voltage divider (in its lower part) or that the contact in the lower contact set of the -)102 relay (in the reception-transmission relay block) does not close or finally, that the relay coil is open circuited. The last listed fault may be easily determined by switching the "_____"(mode of communication selector switch on the central control panel from the "C" (Simplex) position to the "_____" (semi-duplex) position and back again (simultaneously pressing the "&_____"(radio communication unit"(on) push button. In the "C"(simplex) position the relay -) 102 should close. When it has been determined that the relay coil is in order, sat the "_____" (high voltage) toggle switch on the first section to the "_____"(off) position

Declassified in Part - Sanitized Copy Approved for Release 2013/10/18 : CIA-RDP80T00246A071100330001-5

Declassified in Part - Sanitized Copy Approved for Release 2013/10/18 : CIA-RDP80T00246A071100330001-5
NO FOREIGN DISSEM

and connect one ohm.metef lead to the upper lead of the 5000 ohm. resistor in the bias voltage divider, whereas the other ohm. meter lead connect to the chassis. Then, after switching the "_____"("mode of communication") selector switch from the "_____"("semi-duplex") position to the "C" ("simplex") position, determine whether the 5000 ohm.resistor is being shortcircuited. If this is not the case, it means that the lower contact set of the -)102 relay is bad. In such a case it is necesary to remove the reception-transmission relay and repair the contact set of the -)102 relay.

The correct function of the whole bias voltage divider is easily checked by connecting one ohm.meter lead to the terminal 51 of the transmitting rack terminal board 901 and the other ohm.meter lead to the chassis. The resistance in this case should be 750 ohms. In case of an open circuit, it is necessary to successively test all resistors of the voltage divider and to replace the x bad ones.

Them proceed to test the <u>crystal oscillator doubler, (the 1st.stage)</u>.

In case that with any one of the communication channel the 1st.stage is not tuned, it is first of all necessary to check the positions of the selector switches on the central control panel and try to tune this stage with the same crystal into the respective jacks; if the 1st.stage operation will be normal, it m means that the crystal connecting relay is damaged.

Declassified in Part - Sanitized Copy Approved for Release 2013/10/18 : CIA-RDP80T00246A071100330001-5

Declassified in Part - Sanitized Copy Approved for Release 2013/10/18 : CIA-RDP80T00246A071100330001-5
NO FOREIGN DISSEM

50X1-HUM

The defect in the relay operation may be caused by an open circuited relay coil, or its supply circuit, by an open circuit in the crystal circuit (in the grid control circuit of the 1st. stage) or because the contacts of the relay do not make good contact.

If the relay coil is open circuited, or if the supply circuit is open circuited, the relay armature will not close when the respective channel switch is closed. This may be determined by an opening the upper door on the left hand side wall from the frame of the block of the first four stages.
When it is determined that the relay does not work, it is necessary, after shutting down the radio communicator unit to remove the first section from the rack, check the soldering and then test the relay coil with the ohm.meter. The relay is in order if the resistance measured with the ohm.meter is about 150 ohms. When the relay coil is open circuited, it must be replaced by a new one. Then check themotion of the relay armature by lightly pressing on it (on the armature). In cases when the armature binds and when, on the basis of all determined signs, the cause of this defect cannot be located and therefore a repair method cannot be determined, the relay must be replaced by a new one. When it is found that the relay coil is in order, pull the first section out of the rack and connect the ohm.meter to the crystal jacks belonging to the crystal which does not function and by setting the "_____"("high voltage") toggle switch to the "_____" (on") position turn to the radio communication unit on. The ohm.meter should then indicate a

NO FOREIGN DISSEM
Declassified in Part - Sanitized Copy Approved for Release 2013/10/18 : CIA-RDP80T00246A071100330001-5

Declassified in Part - Sanitized Copy Approved for Release 2013/10/18 : CIA-RDP80T00246A071100330001-5
NO FOREIGN DISSEM

50X1-HUM

resistance of about 51000 ohms. When however the resistance will be infinite, it will mean that the control grid circuit is open circuited.

In that case, to eliminate possible faults in the relay contact set, connect one ohm.meter load to the 5th.contact of the crystal oscillator doubler, tube socket and connect the other to the chassis; the resistance should be 51000 ohms. However, if an open circuit is found with the ohm.meter, either the joke coil L 101 or the resistor R 102 must be replaced, depending on which of the two is damaged.

When it is found that the control grid circuit is in order check the condition of the contacts in the relay contact set to see whether the movable and upper station by contacts when the relay is nergized.

If these contacts are not short circuited it will be a proaf of bad conductivity between them.

The conductivity between the contact may be bad for the following reasons:

1). corrosion of the contact surface;

2). deformation of the stationary contact supports;

3). lock of free armature motion -the armature binds.

Corroded relay contact surfaces must be washed with a clean rag dipped in first grade clean alcohol or non-corrosive benzie. If traces of burning remain on the contacts after their washing they must be removed with a thin steel scratcer.

If with the armature closed, the contacts do not touch, carefully bend the stationary contact to a position in which

SECRET
NO FOREIGN DISSEM
Declassified in Part - Sanitized Copy Approved for Release 2013/10/18 : CIA-RDP80T00246A071100330001-5

Declassified in Part - Sanitized Copy Approved for Release 2013/10/18 : CIA-RDP80T00246A071100330001-5
NO FOREIGN DISSEM

sufficient contact with the movable contact will be estabilished.

Next check the proper function of the anode cathode and screen grid circuits.

When chekking the correct function of the anode circuit touch the conductor Ø50 with one ohm.meter lead and with the other lead the 3rd.contact of the crystal oscillator doubler vacuum tube socket. The resistance (with the circuit in order) will be equal to 6 kilometer.(kilo-ohms) In case that the circuit is open, it is necessary to test the circuit from the knife contact 7 of the terminal board ..... of the first four stages block to the 3rd. contact of the crystal oscillator-doubler vacuum tube socket (the resistance should be 6 kilo-ohms). If the latter circuit is open, it is necessary to connect the resistenee R 145 and R 145-1.

When testing the screen grid circuit connect one ohm.meter lead to the 3rd.and the other lead to the 4th.contact of the 1st.stage vacuum tube socket. With the circuit in order the ohm.meter will read 62 kilo-ohms. The screen grid supply circuit may also be tested by abother method, namely by connecting one lead of the ohm.meter to the 4th.prong of the tube socket, whereas the other lead to the knife contact 7 of the block of the 1st.four stages terminal board ..402-1. With the circuit in order in order the ohm/meter will indicate 56 kielo-ohms.

The cathode circuit may be tested only when the reception

NO FOREIGN DISSEM
Declassified in Part - Sanitized Copy Approved for Release 2013/10/18 : CIA-RDP80T00246A071100330001-5

Declassified in Part - Sanitized Copy Approved for Release 2013/10/18 : CIA-RDP80T00246A071100330001-5
NO FOREIGN DISSEM

reception transmission relay is energized. Therefore the "_____" ("mode of communication") selector switch must be in the "C" ("simplex") position, of in the "_____" (duplex") position and the push button for connecting the r.c.u. must be pressed, since the cathode circuit of the crystal oscillator-doubler is connected to the chassis across the contact of this relay. To check this circuit connect one lead of the ohm.meter to the 8 th.prong of the crystal oscillator-doubler vacuum tube socket and connect the other lead to the ~~xhmx~~ chassis. In this case the resistance should be equal to 2 to 2 5 kilo-ohms. if the ohm.meter indicates an open circuit check the choke coil L 101 - 1 the resistor R 161 and the functioning of the contact in the lower contact set of the relay -) 102; this may be done with o one ohm.meter and with the other lead connected to the chassis. The reception-transmission relay is then switched to reception by switching the "_____" ("mode of communi - cation") selector switch on the central control panel from the "C" (Simplex") position to the "_____" ("semi-duplex") position and back again; in the "C" (simplex) position the ohm.meter should indicate an short circuit, whereas in the "_____" (Semi;duplex) position it should indicate an open circuit.

Next proceed to the test of the first trippler (2nd.stage since a defect in its anode circuit (open circuit) prevents the tuning of the 1st.stage, as this stage is tuned according to the ~~xxxxxxxxxxxxxx~~ anode current of the 2nd.stage.

When testing the anode screen grid circuits of the

r.c.u.= radio communication unit.

NO FOREIGN DISSEM
Declassified in Part - Sanitized Copy Approved for Release 2013/10/18 : CIA-RDP80T00246A071100330001-5

Declassified in Part - Sanitized Copy Approved for Release 2013/10/18 : CIA-RDP80T00246A071100330001-5
NO FOREIGN DISSEM

2nd.stage vacuum tubes it is necessary:

1). Connect one ohm.meter lead to the 8th.vacuum tube socket contact of the 2nd.stage and the other lead connect to the chassis in this case the resistance should be 2 kilo-ohms. In case of an open circuit replace the resistors R 109 in the cathode circuit of the 2nd.stage vacuum tube.

2). Connect ohm.meter lead to the 3rd.vacuum tube sokket contact of the terminal board 102-1 of the 1st.four stages block. The resistance should be equal to 6 2 ohm.

3). Connect of the 2nd.stage and the other lead to the 3nd.contact of the same vacuum tube socket. In this case the resistance should be 21000 ohms. Thus a check is made as to whether the high voltage reaches the 2nd.stage vacuum tube screen grid.

It must be realized that the 2nd.stage vacuum tube has in addition to the self bias, a fixed bias from the bias voltage divider (the fixed bias is also applied to the vacuum tubes of the following high frequency section stages as well as to the audio stagea) and when the contact set is damaged, the second stage will be blocked and as a result of this the first stage cannot be turned. To be able to cehck the functioning of this circuit, one lead of the ohm.meter must be connected to the 5th.contact of the second stage vacuum tube socket and the other lead to the chassis. In such a case the entire second stage vacuum tube grid circuit, consisting of the resistor R 108 (100kohm) a part of the bias voltage divider resistors and the lower contact of the

NO FOREIGN DISSEM
Declassified in Part - Sanitized Copy Approved for Release 2013/10/18 : CIA-RDP80T00246A071100330001-5

Declassified in Part - Sanitized Copy Approved for Release 2013/10/18 : CIA-RDP80T00246A071100330001-5
NO FOREIGN DISSEM

50X1-HUM

relay 102, is tested and the resistance should be eqaal to 100 kilo-ohms.

After the circuits of the 1st.and 2nd.stages of the high frequency section have veen shecked and the "_____" ("1st., 2nd., 3rd., and 4th. stage tuning") meter 101 needle does not deflest when turning the tuning knob of the 1st.stage, check the instrument proper and check the contacts of its selector switch 101. If the open-circuit is in the meter, the meter must be replaced by a good one, or if the contact in the respective position of the selector switch is bad, this defect must be corrected. In case that the meter needle while tuning goes off. scale with the selector switch in the "1" position and in the "2" position the transmitter will not be tuned, it will mean that the shunting resistor R 104 in the anode circuit of the 2nd. stage vacuum tube is opencircuited.

When the 2nd.stage is tuned and operates properly, proceed to test the 2nd.trippler (the 3rd.stage)because the 2nd.stage is tuned by the anode current of the 3rd.stage tube.

To test the anode circuit of the 3rd.stage vacuum tube, connect one ohm.meter lead to the induction coil L-107 of the 3rd.stage circuit and the other lead connect to the 3rd.contact of the 2nd.stage vacuum tube socket. The measured resistance should be 6,2 kilo-ohms.

After making sure that the anode circuit of the 3rd.stage vacuum tube is in order, the screen grid circuit must be tested. Connect one lead of the ohm.meter to the 3rd.contact of

SECRET
NO FOREIGN DISSEM
Declassified in Part - Sanitized Copy Approved for Release 2013/10/18 : CIA-RDP80T00246A071100330001-5

Declassified in Part - Sanitized Copy Approved for Release 2013/10/18 : CIA-RDP80T00246A071100330001-5
NO FOREIGN DISSEM

the 3rd.stage vacuum tube socket and the other lead conhactto the inductance coil of the 3rd.stage circuit.
The resistance should be 51 kilo-ohms. After determining that these circuits is in good order, check the condition of the "_____ _____" (1st., 2nd., 3rd. and 4th.stage tuning") selector switch -)101 contacts.

After checking the state of the selector switch contacts check the operation of the relay assembly and proceed to the test of the 1st.power amplifier (the 4th.stage).

To test the anode circuit of the 4th.stage vacuum tube it is necessary to:

1.) Connect one ohm.meter to the terminal 49 of the transmitter output terminal board, and the other lead contact to the loop of the 4th.stage circuit. With this circuit in order, the ohm.meter will read ≈ 2000 ohms. However if this circuit is open, the anode chike coil (L 102) of the 4th.stage and the two 1000 ohm.series, connected resistors (R 141 and R 141-1 located in the lower left part of the transmitter rack must be wchecked.

2.) Connect one ohm.meter lead to the 4th.stage vacuum tube: socket contact 4 and the other lead to the chassis, a short circuit will be read when the circuit is in order. Should the ohmmeter indicate on open circuit, then the open circuit is in the shunting resistor R 105-1 or in the selector switch contact. In such a case replace the shunting resistor and repair the selector switch contact. The meter is in order, since it has been tested in advance.

NO FOREIGN DISSEM
Declassified in Part - Sanitized Copy Approved for Release 2013/10/18 : CIA-RDP80T00246A071100330001-5

Declassified in Part - Sanitized Copy Approved for Release 2013/10/18 : CIA-RDP80T00246A071100330001-5
NO FOREIGN DISSEM

Next it is necessary to test the screen grid circuit. Connect one ohm.meter lead to the 4th.stage vacuum tube socket contact # 3 and the other lead to the loop of the 3rd.stage circuit. The resistance should be 22 to 25 kilo-ohms. Should an open circuit be determined, then it is necessary to replace the resistors R 112, R 112-1 in the screen grid circuit of the 4th. stage vacuum tube.

Should it turn out that the resistors are in order add that the 4th.stage can be tuned (which is determined by touching the 4th.stage circuit with the base of a neon bulb and the neon bulb lights, it is necessary to test the second power amplifier (the 5th.stage), since the 4th.stage vacuum is tuned by the cathode current of one of the 5th.stage vacuum tubes.

When testing the anode circuit of the 5th.stage vacuum tube, connect one ohm.meter lead to the terminal 48 of the output terminal board and the other lead connect to the resonant line tube of the 5th.stage. In this case the resistance should be 1500 ohm.

Next it is necessary to test the grid circuit of the 5th.stage vacuum tubes. For this purpose connect one ohm.meter lead to the grids and the other one to the chassis. The resistance should then be 5100 ohm.

After checking the grid circuit, the cathode circuit remains to be tested. Connect one ohm.meter lead successively to the cathodes of both vacuum tubes of this stage and connect the other ohm.meter lead to the chassis. In both cases the ohm.meter should indicate a short circuit. Should the ohm.meter, however, indicate an open circuit, then it is necessary to check the three shunting resistors, R 113, R 114 and R 114-1 which are located on the instrument panel and to replace the defective ones.

Declassified in Part - Sanitized Copy Approved for Release 2013/10/18 : CIA-RDP80T00246A071100330001-5

Declassified in Part - Sanitized Copy Approved for Release 2013/10/18 : CIA-RDP80T00246A071100330001-5
NO FOREIGN DISSEM

The voltage for the "_____" (1st., 2nd., 3rd., and 4th. stage tuning) meter is derived from the first of these resistors. It must be remembered that it is possible to tune the 4th.stage, van when the selector switch of the first four stages is damaged, by the maximum deflection of the "_____ _____" ("5th. and 6th. stage symetry) meter needle with the x selector switch of this meter in the position which corresponds to the second vacuum tube of the 5th.stages.

After determining the correct operation of the 5th.stage. the output power amplifier (the 6th.stage) remains to be tested. First it is necessary to check whether the high voltage reaches the anode of the 6th.stage vacuum tubes. This is checked by connecting one ohm.meter lead to the terminal 48 and the other one to resonant.line tube of the 6th.stage. The resistance in this case should be 370 ohms. If this circuit is open, then check with the ohm.meter the resistors (R 143-1, R 143-2, R-143-3) in the 6th. stage anode circuit which are located in the lower right hand side rear part of the transmitter rack.

After determining that the anode circuits are in order it is necessary to test the grid circuit by connecting one ohm.meter lead to the grids and the other lead to the shassis. The resistance should be 5400 ohms. If a short circuit is found with the ohm. meter, check whether the doors of the inner shields are not open. If they are closed it is then necessary to successively solder the end of the circuit grid and find the place where the grid connected itself to the chassis. Should the ohm.meter indicate an open circuit, test the selfbias resistors in the grids of the 6th. stage vacuum tubes ,

NO FOREIGN DISSEM
Declassified in Part - Sanitized Copy Approved for Release 2013/10/18 : CIA-RDP80T00246A071100330001-5

Declassified in Part - Sanitized Copy Approved for Release 2013/10/18 : CIA-RDP80T00246A071100330001-5
NO FOREIGN DISSEM

50X1-HUM

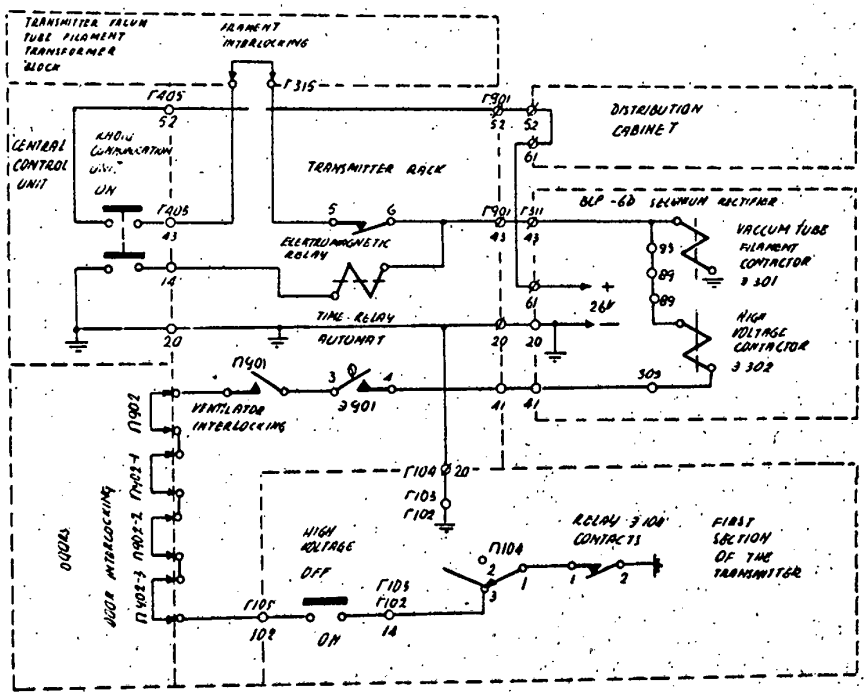

Fig. 13 - 1. Transmitter interlocking schematic diagram.

SECRET

NO FOREIGN DISSEM
Declassified in Part - Sanitized Copy Approved for Release 2013/10/18 : CIA-RDP80T00246A071100330001-5

Declassified in Part - Sanitized Copy Approved for Release 2013/10/18 : CIA-RDP80T00246A071100330001-5
NO FOREIGN DISSEM

namely: R 153 (250 ohm), R 154 and R 154-1, (each 100 ohms) and finally R 152-1 and R 152-2 (50 ohm each).

After determining that this circuit is in order, check the cathode circuit of all four _____ of the sixth stage vacuum tubes by connecting one ohm.meter lead successively to the cathodes of all four vacuum tubes, and by connecting the other ohm-meter lead to the chassis. The ohm.meter should, in all four cases, indicate a short circuit, then it will be necessary to look for the trouble in the "_____" (5th. and 6th.stage total current") meter, where the open circuit of an individual tube, then check whether the shunting resistors R 115, R 115-1, R 115-2 and R 115-3, which are located on the instrument panel, are not open circuited. Replace the defective ones by new ones.

After checking of after correcting the faults in the sixth stage circuits, and after ascertaining that the stage tunes, which may be judged by the "ac po a 3 ac a a ") ("5th.stage tuning meter while tuning the sixth stages the indications of this meter increases and reach a maximum, when the resonance is obtained. However, when it is obeserved that the "_____" ("6th.stage tuning") meter needle does not deflect, the circuit of this meter must be tested by checking its assembly according to the modulation monitor schematic diagram.

It must be remembered that the modulation monitor is coupled with the 6th.stage by the coupling loop and by the feeder section, whose end is loaded by the resistor R 147, R147-1 and R147-2. To check whether the feeder did not break down to the chassis, it is necessary to unsolder it from the coupling loop L 114, as well as from the resistors and only then test it by connecting one ohm.meter lead to the central conductor of the feeder and the other lead to the chassis. If the feeder is not broken down,

Declassified in Part - Sanitized Copy Approved for Release 2013/10/18 : CIA-RDP80T00246A071100330001-5

Declassified in Part - Sanitized Copy Approved for Release 2013/10/18 : CIA-RDP80T00246A071100330001-5
NO FOREIGN DISSEM

the ohm.meter will indicate an infinite resistance, whereas in the case of a breakdown, the ohm.meter will show #short circuit.

When it has been determined that the feeder is sound, test the condenser C 132 (by visual inspection) and the resistor R 157 and R 157-1 and check the soundness of the "_____" ("6th.stage tuning") meter.

It must be borne in mind that if the 1,35 KV overload relay frequently closes, the usual reason for this is the breakdwon of one of the ...-7... vacuum tubes. Therefore, when #hecking which of the "_____"(5th. and 6th.#tage symetry") meter successively, starting with the first vacuum tube of the 5th stage and ending with the fourth vacuum tube of the 6th.stage. When the meter needle goes off scale, the broken down vacuum tube is located by the position of the selector switch. When the "_____a 1,35 kc) (1,35 kV overload") pilot lamp blinks, the overload relay momentarily connects the high voltage and immediately disconnects it. In such a case the 1,35 kV overload relay coil is open-circuited and the relay must be taken out and repaired.

After the test and r#mocal of the defects in the high frequency section of the transmitter have been completed, it is necessary to retest the transmitter high frequency section and only then proceed to the audio frequency section testing.

In other instances one may come up against the necessity of testing the vacuum tubes of the tuned high frequency section of the transmitter. In such a test one must be guided by the voltage review indicated by figure 13-2.

Declassified in Part - Sanitized Copy Approved for Release 2013/10/18 : CIA-RDP80T00246A071100330001-5

Declassified in Part - Sanitized Copy Approved for Release 2013/10/18 : CIA-RDP80T00246A071100330001-5
NO FOREIGN DISSEM

50X1-HUM

13 - 4. Test of the transmitter audio frequency section.

After making sure that the high frequency section is in order, it is necessary to check the correct operation of the audio frequency section by connecting a microphone to it and calling out a long "Ah" sound in front of it(adjust the manual modulation level control PP...M knob for maximum in the extreme right position and throw the e vacuum tube voltmeter switches to the input meter and on positions) and judging the proper microphoen and microphone circuit operation by the deflection of the input measuring meter needle.

When the input meter needle does not deflect at all and this defect is not even corrected by an interchange of microphones, then it is necessary to check whether the microphone circuit is alive. Pull out the microphone plug and connect the negative lead to the center prong of the disassembled plug. Push the plug into the "M" jack on the central control panel. The voltmeter should read 6 V. In case that the microphone supply circuit is dead, check the entire microphone supply circuit with an ohm.meter, starting with the contact 52 of the terminal board ..405 (on the central) control unit). An indication that the central control unit conductor 52 is under the potential of 26 V, is the normal lighting of the pilot lamps.

After removing the deflects in the microphone supply circuit and after determining that the audio frequency section input circuits are in order, it is necessary to test the entire audio frequency section. Remove the second section from the transmitter rack and test all transformers with the ohm.meter.

With the input of the audio frequency section .....

through the central control unit from the .... - 10 - .....

SECRET
NO FOREIGN DISSEM
Declassified in Part - Sanitized Copy Approved for Release 2013/10/18 : CIA-RDP80T00246A071100330001-5

Declassified in Part - Sanitized Copy Approved for Release 2013/10/18 : CIA-RDP80T00246A071100330001-5
NO FOREIGN DISSEM

audio oscillator, successively test the audio voltage on the grids of the audio pre-amplifier & first stage vacuum tube (on the second winding of the T 101 transformer) with the TT-1 tester).

After checking the filament and the anode voltages of the audio frequency section vacuum tubes, test the audio voltage on the primary winding of the T 102 coupling transformer with the same TT-1 tester. Next it is necessary to test the audio frequency voltage on the secondary windings H_2K_2 and R_3K_3 of the T102 transformer; these voltages should, on the average be 60 V. Next check the modulation monitor ammeter shunts for open circuits by connecting one ohm.meter lead to the ..Y-80 tube socket contact ≠ and the other lead connect to the chassis. If the circuit i is in order, the ohm.meter will indicate a short circuit. The test must be performed on the circuits of both vacuum tubes.

Next it is necessary to connect the 600 V and the 1,350 V potentials by means of the "_____"(emergency) toggle switch on the panel of the BCP-66 rectifier block ≠ 1. In case that the needle of the "_____"("modulation anode current") meter deflects, the modulation monitor must be tested by ch checking the cuprox rectifier of the modulation monitor.

When the modulator vacuum for the fifth and sixth stages are replaced, or after any repair job, or after the preliminary adjustment of the radio communication unitm the setting of the automatic modulation level control detector (AP..M)

Declassified in Part - Sanitized Copy Approved for Release 2013/10/18 : CIA-RDP80T00246A071100330001-5

Declassified in Part - Sanitized Copy Approved for Release 2013/10/18 : CIA-RDP80T00246A071100330001-5
NO FOREIGN DISSEM

50X1-HUM

voltage control sliding contact stop must be checked, if necessary.

The remote control unit must be opened for this test, the ...-10-.. audio oscillator (with its selector switch set for 1,000 cps.) must be connected to it, the radio communication unit turned on and the radio communication unit control transferred to the remote control unit. Turn the "_____" ("modulation level control") knob on the central control panel clockwise to the stop, adjust the voltage read by the vacuum tube voltmeter to 0,25 V by means of the "_____"("connecting line voltage") knob on the remote control panel). Under these conditions the modulation coefficient should be at least 80% at all operating frequencies, to successively operate the transmitter with all available crystals and to determine with which crystal the modulation level is lowest. Loosen the control shaft of the delayed automatic volume control unit) and adjust the shaft with a screwdriver to such a position, at which the modulation coefficient will be 80% when using, the crystal with which the modulation level was the lowest, make a new mark on the circumference of the shaft and look the shaft.

Sometimes the need may arise to test the audio frequency section tubes directly. When performing such a test, it is necessary to be guided by the voltages which are listed on figure 13-3. Before running the test, disconnect the modulator voltage supply.

NO FOREIGN DISSEM

Declassified in Part - Sanitized Copy Approved for Release 2013/10/18 : CIA-RDP80T00246A071100330001-5

Declassified in Part - Sanitized Copy Approved for Release 2013/10/18 : CIA-RDP80T00246A071100330001-5
NO FOREIGN DISSEM

50X1-HUM

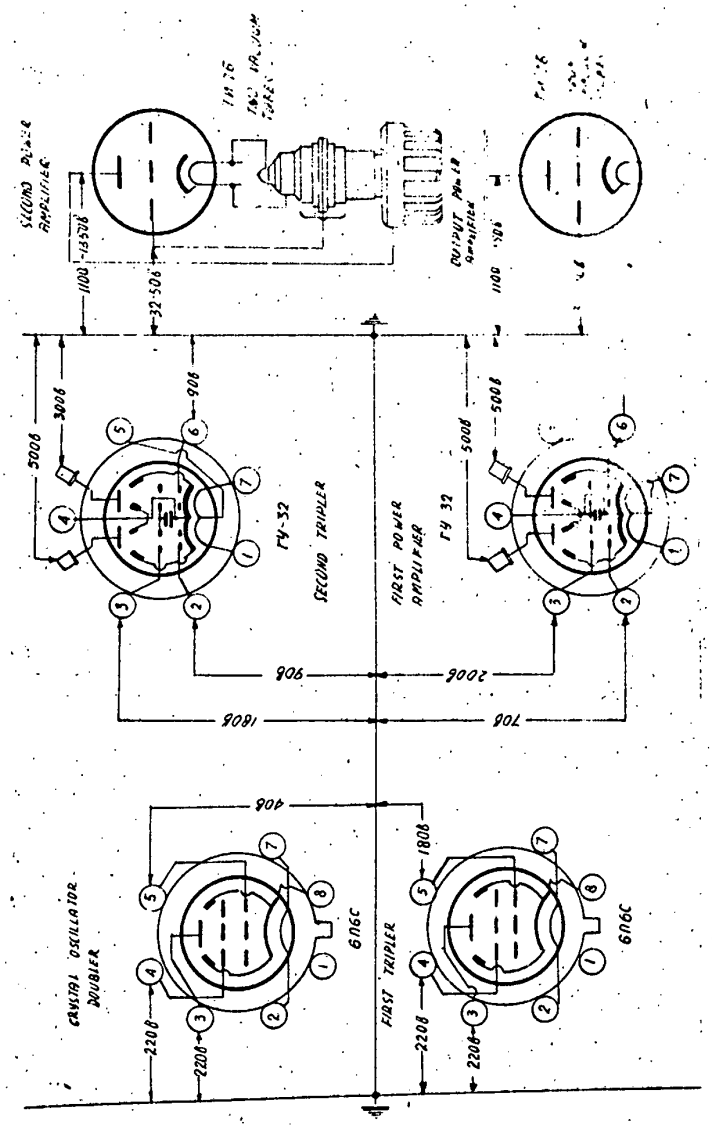

Fig. 13-2. Review of the voltages on the electrodes of the transmitter high frequency section.

NO FOREIGN DISSEM

Declassified in Part - Sanitized Copy Approved for Release 2013/10/18 : CIA-RDP80T00246A071100330001-5

Declassified in Part - Sanitized Copy Approved for Release 2013/10/18 : CIA-RDP80T00246A071100330001-5
NO FOREIGN DISSEM

The above listed test methods of the various transmitter circuits can be performed completely only in shops which make the main repairs and which have special transfer cables. These cables enable performing the tests of the first and the second transmitter sections with the supply voltages applied outside of the rack. That way there is free access to the various units and with it arises the need for extreme care that no one will touch the high voltage circuits. Aside from this, it is not permitted to operate the first section outside the rack (without forced air cooling of the ....- 7 ... vacuum tubes) for periods longer than five minutes.

==========

The test procedures for the central control unit and the remote control unit are not listed here, since all circuits of both the central control unit and of the remote control unit have been described in detail and all contacts over which which the circuits are made have been shown in the first part of this manual in the "Technical description of the radio communication unit".

With reference to the basic schematic diagrams of the radio communication unit elements, all of the circuits may be easily tested and their defects removed.

To fascilitate the testing of the individual tubes figure 13-4 lists a review of the vacuum tube socket connections.

NO FOREIGN DISSEM

Declassified in Part - Sanitized Copy Approved for Release 2013/10/18 : CIA-RDP80T00246A071100330001-5

Declassified in Part - Sanitized Copy Approved for Release 2013/10/18 : CIA-RDP80T00246A071100330001-5
NO FOREIGN DISSEM

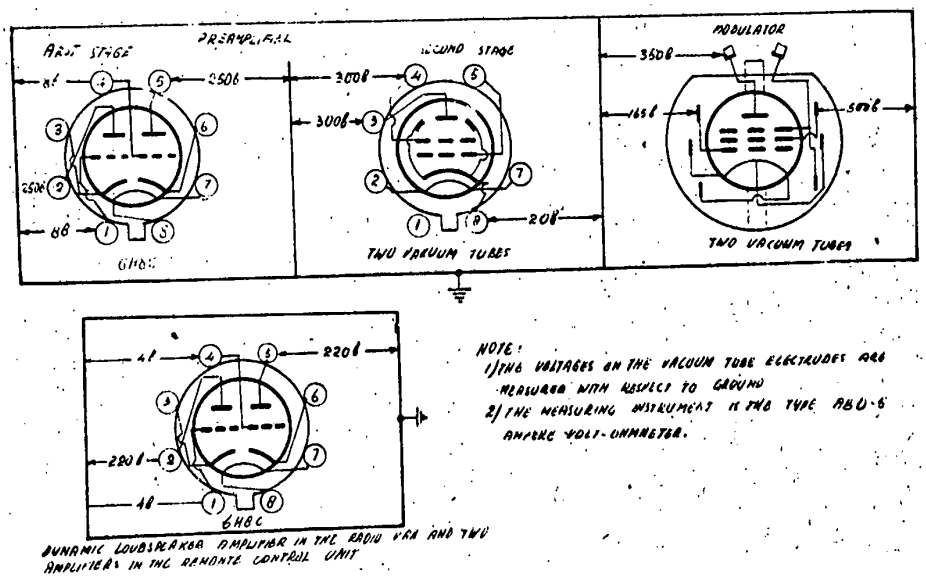

Fig. 13-4. Review of the voltage on the electrodes of the transmitter audio frequency section of the radio van amplifier and of the remote control unit.

13-5. Compensation of the selenium rectifier aging in the radio communication unith rectifiers.

After prolonged operation of the equipment, the rectifier voltage is lowered as a result of the aging of the selenium

NO FOREIGN DISSEM
Declassified in Part - Sanitized Copy Approved for Release 2013/10/18 : CIA-RDP80T00246A071100330001-5

Declassified in Part - Sanitized Copy Approved for Release 2013/10/18 : CIA-RDP80T00246A071100330001-5
NO FOREIGN DISSEM

50X1-HUM

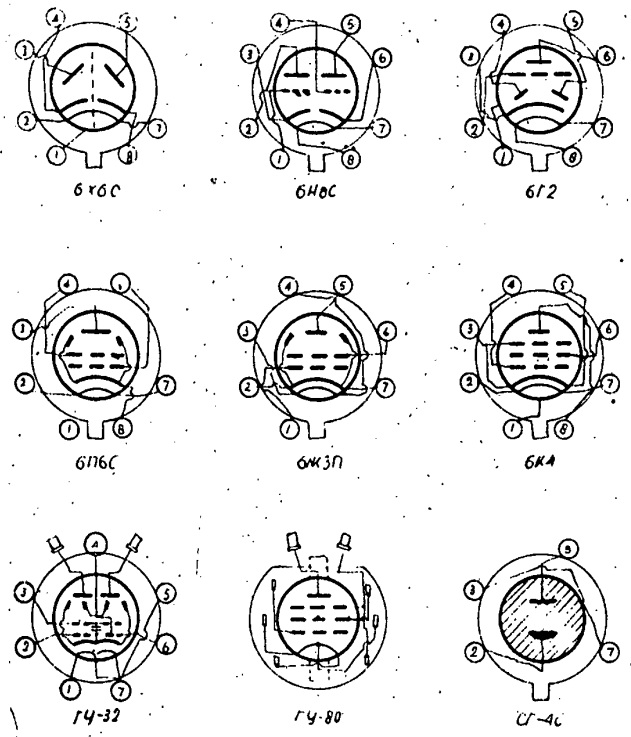

Fig. 13-4. The vacuum tube socket connections (of both the high vacuum type and the gasseous voltage regulators.

rectifiers. To compensate for the aging of the selenium elements in the rectifiers, the transformers are wound with voltage adjustment taps.

When measuring the potentials in the 800 V and in the 1,350 V. circuits, it is necessary to bear in mind that the voltages brought out to the jacks of the control board on the front panel of the BCP-6.. rectifier block ≠ 4 come from a voltage divider and, therefore, the meter readings must be multiplied by two for the 600 V rectifier and by five for the 1,350 V rectifier.

When, as a result of the aging of the selenium elements,

SECRET
NO FOREIGN DISSEM
Declassified in Part - Sanitized Copy Approved for Release 2013/10/18 : CIA-RDP80T00246A071100330001-5

Declassified in Part - Sanitized Copy Approved for Release 2013/10/18 : CIA-RDP80T00246A071100330001-5
NO FOREIGN DISSEM

50X1-HUM

the rectified voltage drops by more than 10% with the full power line voltage of 220 V (380 V), it is necessary to reconnect the transformer taps.

1. Reconnecting the voltage taps of the BCP-... rectifier transformer.

For reconnecting the voltage taps of the BCP-6... rectifier transformer (see the schematic diagram of the BCP-..... selenium r rectifier), it is necessary to first remove the blocks from the rectifier rack, then take out the blocks with the selenium columns, reconnect the winding taps of the transformers (the numbers of the leads are listed below), thoroughly tighten the screws, place the selenium column blocks in their places (while paying attention to the numbers of the contacts so that the selenium column blocks w will not become interchanged) and place the blocks in the rectifier rack.

For changing the taps, follow this procedure:

1. Reconnect the 26 V.rectifier leads from the taps 270, 218 and 219 of the transformer T 305 secondary winding to the taps 215, 216 and 220.
2. Reconnect the 600 V rectifier leads from the taps 270, 271, and 272 of the T 303 transformer (block ≠ 40 secondary winding to the taps 273, 274 and 275.
3. Reconnect the +300 V and the -300 V rectifier lead from the taps 78, 79 and 80 of the T 304 transformer (block ≠ 3) primary winding to the taps 60, 58 and 60.
4. Reconnect the 1,350 V rectifier leads from the taps 295, 296, 297, 298, 299 and 300 of the T 302 transformer (block ≠ 2) secondary winding to the taps 311, 310, 309, 308, 307 and 306.

SECRET
NO FOREIGN DISSEM
Declassified in Part - Sanitized Copy Approved for Release 2013/10/18 : CIA-RDP80T00246A071100330001-5

Declassified in Part - Sanitized Copy Approved for Release 2013/10/18 : CIA-RDP80T00246A071100330001-5
NO FOREIGN DISSEM

50X1-HUM

2. Reconnecting the voltage taps of the BC..-2 rectifier transformers.

In the BC..-2 rectifier (see the schematic diagram of the type BC/.-2 rectifier figure 6-12) the following taps must be ..... on the secondary winding of the 7701 transformers;

1) When the ..702 (27 V) rectifier voltage drops, resolder the lead from the tap 14 of 13'to the tap 14",

2) When the ..703)-10 V) rectifier voltage drops, resolder the lead from the tap 12to the tap 12'.

3) When the ..701 (275 V) rectifier voltage drops, resolder the lead from the tap 12' to the tap 12" .

3. Reconnecting the voltage taps of the connecting line rectifiers.

In the connecting line rectifier (see the schematic diagram of the power supply elements in the transmitter rack fig.5-17) resolder the lead from the tap 13 of the secondary winding of the transformer T 311 to the tap 14 (sometimes the lead is soldered to tap 12 and in that case it should be resoldered from the tap 12 to the tap 13 or 14).

13-6. Possible defects in the operation of the radio communication unit elements and methode for their removal.

SECRET
NO FOREIGN DISSEM
Declassified in Part - Sanitized Copy Approved for Release 2013/10/18 : CIA-RDP80T00246A071100330001-5

Declassified in Part - Sanitized Copy Approved for Release 2013/10/18 : CIA-RDP80T00246A071100330001-5
NO FOREIGN DISSEM

50X1-HUM

Para. No.	Defect.	cause	removal.
	1. In the transmitter.		
1.	In one of the "..... ....." (5th.and 6th.stage symmetry selector switch positions the meter needle goes off scale with a normal total current comsumption.	Open circuit or bad contact in the respective shunting resistor.	With the ohmmeter check the condition of the contact in the shunt.Repair the contact.
2.	In one of the "..... ....."(5th.and 6th.stage symmetry") selector switch positions the meter does not read.	1) The selector switch position does not correspond to the"..... ....."vacuum tube. It's filament does not heat.	1) Check the filament of the vacuum tube with the ohmmeter. Replace the bad tube with a new one.
		2) The "..... ....."("5th. and 6th.stage symmetry)selector switch does not make contact (in the respective position) or the respective tube socket does not make contact.	2) Check the condition of the contact with an ohm. meter and repair the contact.
3.	In one of the "..... ....."(5th.and 6th.stage symmetry") selector switch positions the meter needle goes off scale when the high voltage is turned on and the overload relay closes.	The selector switch position does not correspond to the .....vacuum tube.	It is necessary to attempt to harden the vacuum tubes while operating the transmitter at reduced power (the "..... ("power") toggle switch on the central control panel must be in the "25%" position)for 15 to 20 minutes. If this does not help, replace the vacuum tubes.
4.	The 6th.and 6th.stages do not tune.The "..... .....(5th.and6th.stage symmetry) meter does not read.	The voltage does not reach the 5th. stage vacuum tube anodes (while the voltage is on the terminal board ..901 of the transmitter rack). The	Check the circuit from the terminal 48 of the terminal board ..901 of the transmitter rack to the 5th.stage vacuum tube anode and remove the fault.

NO FOREIGN DISSEM
Declassified in Part - Sanitized Copy Approved for Release 2013/10/18 : CIA-RDP80T00246A071100330001-5

Declassified in Part - Sanitized Copy Approved for Release 2013/10/18 : CIA-RDP80T00246A071100330001-5
NO FOREIGN DISSEM

para. no.	Defect.	Cause	Removal.
		resistors R.142 and R.143 burned out during service with bad....-7... vacuum tubes or because the shield doors were open.	
5.	During semi-duplex communication the transmitter is not turned on upon pressing the microphone	There is no contact in the microphone switch or in the jack on the central control panel.	Check the condition of the contact in the microphone switch and in the microphone jack in the central control panel. Renew the contact.
6.	A part of the range of one stage does not tune.	The shaft of the tuning condenser of this stage is turned (shifted).	Lock the condenser shaft.
7.	In one of the "..... .....1,2,3,4, ... (1st.,2nd.,3rd. and 4th.stage tuning") selector switch positions the meter does not redd(oneof the 1st.four stages of the transmitter high frequency sections does not tune.	1).The tube does not correspond to the selector switch position or the respective stage.	1).Replace the vacuum tubes.
		2).Improper quartz crystal.	2).Check the tuning with another crystal
		3).Improper relay for connecting the crystal.	3).Check the tuning on another communication.
		4).Bad contact between the spring and the rotor of the crystal oscillator-doubler (1st.stage)variable condenser.	4).Check the contact with the ohmmeter and remove the trouble.
		5).There is a fault in one of the supply circuits (grid or cathode).	5).Check the circuits by the method listed above in paragraph 13-3 and remove the trouble.
		6).The"..... 1,2,3,4,5..... (1st.,2nd,3rd,and 4th.stage tuning)selector switch is damaged.	6).Check the contacts with the ohm.meter and remove the trouble.

Declassified in Part - Sanitized Copy Approved for Release 2013/10/18 : CIA-RDP80T00246A071100330001-5

Declassified in Part - Sanitized Copy Approved for Release 2013/10/18 : CIA-RDP80T00246A071100330001-5
NO FOREIGN DISSEM

Paral no.	Defect	Cause	Removal.
		7).Connection of the respective circuit condenser to the cable transmission shaft.	7).Check with the ohm.meter and remove the trouble.
8.	The transfer time from the one communication channel to the other one,when using the automatic tuning device,is longer than 10 seconds.	1).Lowered power line voltage or the buffer storage battery has disconnected itself.	1).Raise the power line voltage to 220 V. Connect the buffer storage battery with on the selector switch on the distribution cabinet.
9.		2).Dirty automatic tuning device.	2)Clean the autotune and lubricate it according to the instructions in chapter 11, paragraph 11-7.
	2. In the transmitter automatic tuning device.		
1.	The autotune does not adjust a knob to the required frequency on one communication channel.	During the operation of this autotune with unlocked knobs a washer loosened from the contacts angle with it had with respect to the ratchet.	Remove the cover above the autotune block,loosen the autotune knob and turn the cam ..... that the tooth of the ratchet will engate the detent.
2.	The locking knob of the autotune does not turn to the left(does not loosen).	The mark on the autotune knob shifted to the right.	Bend the desk wires to the center, turn the locking knob and remove the signal disk. Bend the wires so that the disk will be in line with the knob. After replacing the disk. tighten the locking knob.
3).	The autotune heads rotate slightly both to the left and to the right.	The contact spring of the limiter switch in the autotune head "6" is weak.	Strengthen the contact spring.
4).	The autotune heads rotate only in one direction.	The ~~contact~~ pawl of the ratchet jiggles and does not resist the spring.	Lift the pawl and st strengthen the spring.

Declassified in Part - Sanitized Copy Approved for Release 2013/10/18 : CIA-RDP80T00246A071100330001-5

Declassified in Part - Sanitized Copy Approved for Release 2013/10/18 : CIA-RDP80T00246A071100330001-5
NO FOREIGN DISSEM

50X1-HUM

Para no.	Defect	Cause	Removal.
5.	The link-chain skipped.	The transmission is loose.	Lower the washer under the electric motor.
	3. In the receiver.		
1.	When turning the first knob, the receiver does not tune (according to the metering element.	1)The correct channel has not been choosen.	1) Press the push-button of the respective communication channel on the central control panel and check whether the lever mechanism operates.
		2).Bad contact between the crystal holder and the jacks on the panel or the jack is short circuited.	2)Press the crystal holder contacts together.
		3).The crystal oscillator or frequency multiplier tube is bad.	3)Replace the tubes.
2.	When turning the 2nd. knob the receiver does not tune according to the metering element.	1)An open circuit in the tuning indicator tube circuit.	1)Check the circuit from the frequency multiplier to the tuning indicator tube.
		2)The tuning indicator tube(6x60) is bad.	2)Replace the 6x6C tube.
		3)The receiver is without high voltage.	3)The resistor R. 236 and the shunt R.259 in the receiver burned out or the fuse in the panel of the receivers(the main receiver)burned out or the fuse in the auxilliary receiver control panel burned out.
3).	Low receiver sensitivity.	1)The intermediate frequency amplifier vacuum tubes are bad.	1)Check the receiver vacuum tube operation according to the table 13-1 and replace the bad tubes.

NO FOREIGN DISSEM
Declassified in Part - Sanitized Copy Approved for Release 2013/10/18 : CIA-RDP80T00246A071100330001-5

Declassified in Part - Sanitized Copy Approved for Release 2013/10/18 : CIA-RDP80T00246A071100330001-5

Para/ no.	Defect.	Cause	Removal.
		2).The anode current in the audio frequency amplifier circuit output stage is large.	2).Check the bias of the audio frequency amplifier and, in case it does not correspond to the table 13-1 check the bias circuit.
		3).The sensitivity control PP..sliding contact is not in the extreme position.	3)Adjust the sliding contact of the sensitivity control PP.... to the extreme position.
		4)The anode protective resistor burned out in one of the intermediate frequency stages.	4)Check the anode voltage on the 1st. and 2nd.contacts of all intermediate frequency filters.In case there is no voltage on one contact, replace the protective resistor.
		5)Bad contact in a vacuum tube socket.	5)By jiggling the vacuum tubes on the chassis locate the tube socket with a faulty contact and if it cannot be repaired, replace it.
4.	There is no sound (noise) in the head phones.	1)The 6..2 vacuum tube (..209)went bad.	1)Replace the vacuum tubes.
		2)Open circuit in the phones.	2)Replace the phones.
		3)Open circuited output transformer winding in the feeder conductors or in the the cables.	3)Check the cables and the supply conductors. Check the transformer winding with the ohm.meter. If an open circuit is found, replace the transformer with one from the spares.
5.	The noise quieter does not function.	1)The toggle switch which connects the noise quieter does not make contact.	1)Replace the toggle switch.

Declassified in Part - Sanitized Copy Approved for Release 2013/10/18 : CIA-RDP80T00246A071100330001-5

Declassified in Part - Sanitized Copy Approved for Release 2013/10/18 : CIA-RDP80T00246A071100330001-5
NO FOREIGN DISSEM

Para no.	defect.	Cause.	Removal.
		2). Open circuited inductance coil in the noise quieter oscillator circuit.	2). Check the inductance coil with the ohm. meter. If an open circuit is found replace the coil with a new one from the spares.
6.	The vacuum tube filaments do not heat.	The +26 V supply circuit is open circuited.	Check the +26 V circuit with the ohm. meter. If an open circuit is found repair it.

4. In the receiver automatic tuning device.

1.	The stepping relay interrupting contacts burn.	The stepping relay operated for a longer time at a voltage higher than 26 V.	Clean the interrupter contacts.
2.	Defect in the function of the release push-button (when pressing the push-button for the first time, the ratchet wheel turns.	The stepping relay selector switch selector switch contact sets are not adjusted.	Bend the springs of the switch evenly.
3.	When shifting one of the levers of the tuning mechanism, the channel does not work (the crystal is not connected).	The crystal selector levers do not engage the tuning mechanism levers.	Connect all crystal selector levers properly to the levers (push rods) of the lever mechanism.
4.	The stepping relay operates continuously without stopping.	The stepping relay pawl spring broke (when a channel is connected, the stepping relay does not operate.	Replace the pawl and spring with a new one (spare one).
5.	The receiver cannot be turned. The cams are not locked when turning the small knob of the tuning mechanism. The tuning of the receiver accord-	Rusted shaft of the lever mechanism.	Clean the shaft with a small brush or with a piece of cloth dipped in clean benzine.

SECRET
NO FOREIGN DISSEM
Declassified in Part - Sanitized Copy Approved for Release 2013/10/18 : CIA-RDP80T00246A071100330001-5

Declassified in Part - Sanitized Copy Approved for Release 2013/10/18 : CIA-RDP80T00246A071100330001-5
NO FOREIGN DISSEM

Para! no. !	Defect.	! Cause !	! Removal.
	ing to the measuring instrument is made difficult as a result of laborious turning of the knob.		
6.	When pressing one of the channel push-buttons on the central control panel, the automatic tuning of the receiver does not function.	The selector and channel swite ching relay does not make contact.	Check the contacts and if necessary press them together.

5. The measuring element (block "....").

1.	The push-button mechanism does not connect the receiver communication channels.	1)Open circuit in the connectors.	1)Locate the open circuit and renew it.
		2)The connectors 101-201 and +206 are not connects.	2)Connect the connectors.
		3)The push-button wcontacts do not close.	3)Press the push-button mechanism contacts together.
2.	The receiver communication channels are continuously switched.	The jacks of the +206 connector are interconnected.	Check the connector and remove the short circuit.
3.	The meter needle does not deflect.	1)the selector switch contacts do not touch.	1)check the contacts and press the proper contact together.
		2)the connector Ø 101-201 is not connected.	2)connect the Ø 101-201 connector.
4.	The values indicated by the meter fluctuate strongly.	the selector switch contact is bad.	check the contacts and press the proper contact together.
5.	the meter needle deflects in the wrong direction.	the connector Ø 101-201 is improperly connected.	connect the connector according to the instructions.

NO FOREIGN DISSEM
Declassified in Part - Sanitized Copy Approved for Release 2013/10/18 : CIA-RDP80T00246A071100330001-5

Declassified in Part - Sanitized Copy Approved for Release 2013/10/18 : CIA-RDP80T00246A071100330001-5
NO FOREIGN DISSEM

Para! no. !	defect.	! cause	! removal.
	6. In the antenna feeder apparatus.		
	The all-directions 1 and cone and disk type antenna.		
1.	the antenna output is not radiated; bad traveling wave coefficient in the feeder, the received signal is non-existant or strongly attenuated.	1)the inner conductor or the sheath is interrupted between the transmitter and the antenna.	1)inspect and test with the ohm. meter. If the feeder is damaged replace it with a spare one.
		2)there is no contact between the feeder connector on either end of the feeder)and the inner conductor or the sheath.	2)Hammer the feeder connector to shape. Then check it with the ohm/meter.
		3)there is no contact in the connector for passing the current to the antenna.	3)remove the mechanical defect of the antenna feeder connector.
		4)the disk is loosely screwed on.	4)screw the disk on tighter.
		5)there is water in the connector or in the antenna matching transformer a short circuit.	5)Pour out the water, dry the connector and the other components of the antenna. check with the ohm.meter to make sure there is no short circuit.
		6)Ice crust formation.Short circuit across the ice between the disk and the cone.	6)remove the ice crust from the antenna (carefully not to cause mechanical damage to the antenna.
		7)there is no contact between the respective vacuum transfer switch B..-2 (..108)contacts.	7)with the ohm/meter check the respective contacts of the B..-2 transfer switch with the relay ..102 opened and closed Make the necessary adjustment or replace the transfer switch with a new one from the spares.

NO FOREIGN DISSEM
Declassified in Part - Sanitized Copy Approved for Release 2013/10/18 : CIA-RDP80T00246A071100330001-5

Declassified in Part - Sanitized Copy Approved for Release 2013/10/18 : CIA-RDP80T00246A071100330001-5
NO FOREIGN DISSEM

50X1-HUM

Paral no.	defect.	cause	Removal.
		8)the feeder from the symetrization unit to the reception transmission relay broke down during service without the antenna.	8)check the feeder with the ohmmeter and replace if necessary.

Directional antenna of the "wavechannel" (Yagi) type.

1.	the antenna does not radiate the output bad travelling wave coefficient in the feeder (..0,5); there is no signal or signal is strongly attenuated.	1) the inner conductor or the sheath is interrupted between the transmitter and the antenna.	1)replace the feeder by a new one from the spares.
		2)there is no contact between the feeder connector and the inner conductor or sheath of the feeder.	2)reshape the feeder connector by hammering.Then check with the ohm.meter.
		3)Bad contact of the feeder connecter and the antenna symmetrization unit connector.	3)Completely tighten the screws of the feeder connector on the symmetrization unit.
		5)the antenna is incorrectly tuned.	5)tune the antenna to the operating frequency of the radio communication unit according to the instructions.
		6)the antenna is incorrectly tuned as a result of bad contact between the movable parts and the stationary parts of the radiator.	6)tighten the bolts on the radiators communication unit according to the radiators completely.
		7)short circuit in the antenna,water in the connector.	7)pour out the water and dry the antenna parts.

NO FOREIGN DISSEM
Declassified in Part - Sanitized Copy Approved for Release 2013/10/18 : CIA-RDP80T00246A071100330001-5

Declassified in Part - Sanitized Copy Approved for Release 2013/10/18 : CIA-RDP80T00246A071100330001-5
NO FOREIGN DISSEM

para! no. !	defect.	! cause !	Removal.
		8)Ice crust formation. Short circuit between the radiator dipole sections.	8)Remove the ice from the antenna, being careful not to cause mechanical damage to the antenna.
		9)tha radiator is not in one plane.	9)adjust the radiator into a single plane as per instructions.
		10)thereois no contact between the respective vacuum transfer switch B..-2 (..108) contacts.	10)With the ohm.meter ucheck the condition of contacts between the respective transfer switch B..-2 contacts with the relay -)102 closed and open. Make t the necessary adjustment or replace the transfer switch with a new one from the spares.
		11)the feeder from the symmetrization equipment to the reception-transmission relay broke down during service without the antenna.	11)check the feeder with the ohm.meter and replace it if necessary.
	Antenna of the auxilliary receiver.		
1.	the auxilliary receiver does not reproduce the signal being received.	1)the connector is defective;there is a short circuit (water);the circuit the contact prongs are broken.	1)remove the broken contact prongs from the connector. Check the connector with the ohm.meter.
		2)the inner condutor or the sheath is broken between the antenna and the receiver.	2)connect a new feeder.
		3)short circuit in the feeder connector.	3)unscrew the feeder from the connector. Pour out the water.

Declassified in Part - Sanitized Copy Approved for Release 2013/10/18 : CIA-RDP80T00246A071100330001-5

Declassified in Part - Sanitized Copy Approved for Release 2013/10/18 : CIA-RDP80T00246A071100330001-5
NO FOREIGN DISSEM

Para no.	defect.	cause	removal.
		4)short circuit between the connector and the antenna (ice crust or water in the insulator.	4)Unscrew the antenna. Wipe out the connector. Remove the ice.

7. In the electric supply elements.

The BCP-6,, rectifier.

1.	After connecting the "_____" ("power line")-power plant")selector switch the voltmeter does not indicate a deflection on one phase.	the "_____" ("power line")-power plant")selector switch is damaged.	check the selector switch and particularly its contacts
2.	the pilot lamp"....." ("line") is dim.	the fuses ≠11, ≠12 and ≠13 in block ≠4 or the fuses ≠2, ≠3 and ≠4 in the block ≠4 have burned out.	check the voltage on all 3 phases with the voltmeter on the block ≠5 panel. check the fuses in the ≠4 and ≠3 blocks, replace the burned out once.
3.	When pressing the push-button for burning on the radio communication unit the contactor-)301 does not connect the contactor for the vacuum tube filament supply.	1)the fuse in block ≠4 burned out.	1)check the circuit according to the schematic diagram and replace the burned out fuses.
		2)the auxilliary contact for the stepwise connecting -)301 contactor is burned or bent.	2)remove the block ≠3, inspect and repair the contact.
4.	after connecting the filament evoltage there is no 300 V, 600 V and 1,35 kV supply.	1)the electromechanical "_____"("time delay") relay is damaged, there is a bad contact in the contact set of the -)302 contactor there is no contact between the interblock knife contact connectors.	1)check and clean the contacts.

Declassified in Part - Sanitized Copy Approved for Release 2013/10/18 : CIA-RDP80T00246A071100330001-5

Declassified in Part - Sanitized Copy Approved for Release 2013/10/18 : CIA-RDP80T00246A071100330001-5
NO FOREIGN DISSEM

Para No.	Defect.	Cause	Removal.
		2)The circuit from contact 41 of the rectifier terminal board 311 to the transmitter is open circuited.	2)Connect the contact 41 on the terminal board 311 of the BCP-6..rectifier to the chassis. When the high voltage is turned on, then the interlocking contacts in the transmitter are bad. Renew the interlocking by disconnecting contact 41 from the chassis. Check the ventilator interlocking and the condition of the air oil filters in the transmitter rack particularly closely.
5.	There is no supply voltage +300 V or - 300 V.	Thefuse ≠7 or ≠8 has burned out.	Check and replace them.
6.	There is 300 V but not 600 V.and 1,35 kV.	1)The resistor R.319 burned out.	1)Check and replace it.
		2)The relay in block ≠3 is damaged, the auxilliary contact of the contactor -)302 is damaged, there is bad contact in the overload relays -)309 and -)310 contact set, the "..." ("emergency") switch contacts on the panel of block ≠1 is disconnected or damaged.	2)Check according to the schematic diagram and repair.
7.	There is no 300 V.stabilized voltage.	1)short circuit in the voltage regulators C..-40 (..301).	1)check and place with a spare one.
		2)The resitor R.304 or R.304-1 burned out.	2)Check and replace.
8.	The 300 V stabilized voltage is raised.	1)The voltage regulators 0..-4C.(..301) are bad.	1)Check and replace with spare ones.

Declassified in Part - Sanitized Copy Approved for Release 2013/10/18 : CIA-RDP80T00246A071100330001-5

Declassified in Part - Sanitized Copy Approved for Release 2013/10/18 : CIA-RDP80T00246A071100330001-5
NO FOREIGN DISSEM

Para. no.	defect.	Cause.	Removal.
		2)the voltage stabilizer tube sockets do not make contact.	2)check and press together contacts.
9.	Some rectifiers give a low voltage.	1)one phase is without voltage on account of a burned out fuse, there is a bad contact in the contactor or in the knife contacts of the interblock connections.	1)check and replace the burned out fuses clean the contacts press the receptacle spring contacts of the interblock contacts together.
		2)A number of selenium elements or an entire column dropped out of service.	2)Follow the instructions for maintenance of the BCP-6..rectifier.
10.	The"_____" ("overheating") pilot lamp lights.	1)the 26V rectifier is overloaded.	1)Test the load and and reduce it.
		2)The ventilator does not function.	2)Inspect the ventilator and repair the damage.
		3)the air oil filters are clogged.	3)wash out the filters.
		4)The ventilating openings in the cable box section are closed.	4)open the openings.

Distribution box.

1.	The B.303 fuses blow.	1)the lighting transformer T.309 is damaged.	1)Repair the transformer.
		2)the electric heater is damaged.	2)disconnect the heater and repair. it.
		3)the ventilator electric motor is damaged.	3)disconnect the ventilator motor and repair it.
		4)the lighting circuit is faulty.	4)check the individual sections. of the network (with removed bulbs) for the short circuits according to schematic diagram.

NO FOREIGN DISSEM
Declassified in Part - Sanitized Copy Approved for Release 2013/10/18 : CIA-RDP80T00246A071100330001-5

Declassified in Part - Sanitized Copy Approved for Release 2013/10/18 : CIA-RDP80T00246A071100330001-5
NO FOREIGN DISSEM

Para! no. !	defect.	! cause !	removal.
2.1	The B.305 fuses blow.	1)short circuit in in the transmitter and central control unit supply circuit.	1)by successively disconnecting the conductors from the terminals 82, 83, 80 ,66, 85, 81 and 74 locate the open circuit and repair it.
		2)the ammeter reads an increased charging current (above 11 amps) with the BC3-1 rectifier charging.	2)check whether the storage batteries are correctly connected.
3.	When the alternating current is connecting, the lights go out.	1)the -)311 relay is damaged.	1)remove the distribution box from the housing and inspect the relay.
		2)the light switching relay -)311 contacts are oxidized or burned.	2)clean the contacts.
4.	As soom as the charging rectifier voltmeter indicates the voltage, there is no charging current.	the storage battery being charged is disconnected.	check the connections of the battery and connect it.

Charging rectifier BC3-1.

1.	when the rectifier is turned on the fuses blow, the ammeter reads an increased charging current.	1)there is a surface creepage between the cable conductors 74 and 20.	1)check the cables and repair it.
		2)the storage battery being charged is not in good order.	2)check and repair the storage battery.
2.	the fuses blow, the voltmeter and ammeter needles do not deflect.	there is a short circuit in the transformer primary or secondary.	xcheck the transformer and correct the faulty conditions.

SECRET

NO FOREIGN DISSEM

Declassified in Part - Sanitized Copy Approved for Release 2013/10/18 : CIA-RDP80T00246A071100330001-5

Declassified in Part - Sanitized Copy Approved for Release 2013/10/18 : CIA-RDP80T00246A071100330001-5
NO FOREIGN DISSEM

Para no.	defect.	cause	removal.
3.	the ventilator does not work.	1)the switch is damaged.	1)repair the switch
		2)the brushes of the AY-40 electric motor are worn.	2)replace the brushes or stretch the brush springs if the brushes are still long enough.
	The transmitter vacuum tube filament transformer block.		
1.	one of the transformers is without voltage.	1)the interconnecting terminal boards are without contact.	1)check and re-establish the terminal boards.
		2)one of the secondary or primary windings has a short circuit.	2)check according to the schematic diagram and correct the faulty condition.
2.	the voltage on one of the transformers is below 12 V; the transformer secondary winding voltage change in the power line voltage (by the selector switch on the BCP-6..rectifier block ≠ 5.	1)one of the condenser broke down.	1)Replace the condenser with a spare one.
		2)the choke coil winding has a short circuit.	2)send to the repair shop.
		3)the secondary windings have a short circuit.	3)send to the repair shop.
3.	the secondary winding voltage is above normal.	the choke coil circuit is open.	check and re-establish the circuit.
	The receiver and central control unit supply rectifier BC..-2.		
1.	There is no rectifier output voltage.	1)the .701 selenium selector switch contacts do not close.	1)check the functioning of the selector switch and repair it.
		2)the transformer winding turns are shorted.	2)send the transformer away for rewinding.

Declassified in Part - Sanitized Copy Approved for Release 2013/10/18 : CIA-RDP80T00246A071100330001-5

Declassified in Part - Sanitized Copy Approved for Release 2013/10/18 : CIA-RDP80T00246A071100330001-5
NO FOREIGN DISSEM

Para. no.	defect.	cause	removal.
2.	the output voltage is above normal.	1)the transformer is not loaded.	1)check and connect the load circuits.
		2)the stabilizing choke coil circuit is open.	2)re-establish the circuit.
3.	there is a 50 to 100 cps.hum in the receiver headphone.	the filter circuit is faulty; the choke coil is leaky, or one of the electrolytis condensers is damaged.	check the filter circuit and replace the condensers or repair the choke coil.
4.	the high voltage is under 270 V, or the low voltage is less than 25 V,while the alternating current voltage 6,3 V.is normal.	1)overloaded by the reduced voltage circuit.	1)check the function of the stepping relay, reduce the load of the reduced voltage circuit.
		2)open circuit of the filter input condenser.	

8. In the remote control unit.

1.	When pressing one of the communication channel selector push-buttons the automatic tuning does not operate.	1) there is no contact between the moavable and stationary push-button contacts.	1) adjust the contacts.
		2) the 180 V.does not reach the remote control unit.	2).check the voltages between terminals"9", "10" and the termin "8" (chassis). check the control line rectifier.
2.	when pressing the " ("high voltage") push-button ..690 the voltmeter M.601 needle does not deflect.	1)the ..605 push-button contact does not close.	1)adjust the contacts.
		2)the B.601 fuse burned out.	2)replace the fus
		3)the selector switch ..603 contact does close.	3)press the ..6 selector switch contacts togeth

Declassified in Part - Sanitized Copy Approved for Release 2013/10/18 : CIA-RDP80T00246A071100330001-5

Declassified in Part - Sanitized Copy Approved for Release 2013/10/18 : CIA-RDP80T00246A071100330001-5
NO FOREIGN DISSEM

para no.	defect.	cause.	removal.
		4).the vibrator converter toggle switch contacts do not close.	4)adjust the toggle switch contact.
		5)the vibrator B-12 of the vibrator convertor does not work.	5)replace the B-12 vibrator with a spare one.
3.	the microphone amplifier does not work.	the vacuum tube is bad.	test the tube and if bad replace it with a new one from the spares.
4.	the dynamic loudspeaker amplifier output voltage.	the vacuum is bad.	test the tube and if bad replace it with a new on
5.	when using the throat microphone there is no amplifier output voltage.	1)the throat microphone cord is broken.	1)repair or replace the cord with a new one.
		2)the contacts of the ~~microphone cord switch~~ switch are damaged.	2)adjust the contacts.
6.	when using the carbon microphone there is no amplifier out-put voltage.	1)the contacts of the microphone switch are damaged.	1)adjust the contacts.
		2)the microphone cord is open circuited.	2)re-establish the circuit.
		3)the relay -)601 contacts are damaged.	3)adjust the contacts
7.	upon pressing the microphone switch the pilot lamp ..602 which signals the operating readiness of the transmitter does not light, although it is known that the transmitter operated and the connecting line is in order.	1)the transmitter operating readiness signal relay P.602-1 does not close.	1) check the relay coil with the ohm/meter.
		2)the contacts of this relay are damaged.	2)adjust the relay contacts.

SECRET

NO FOREIGN DISSEM

Declassified in Part - Sanitized Copy Approved for Release 2013/10/18 : CIA-RDP80T00246A071100330001-5

Declassified in Part - Sanitized Copy Approved for Release 2013/10/18 : CIA-RDP80T00246A071100330001-5
NO FOREIGN DISSEM

para. no.	defect.	cause	removal.
8.	the A.601 vibrator converter voltage output is low.	one of the filter condensers broke down.	replace the bad condensor with a tested new one.
9.	When using semi-duplex communication there is no reception.	1)the relay -)601 contacts are bad.	1)adjust the relay contacts.
		2)the mode of communication selector switch .602 contacts are bad.	2)adjust the selector switch .602 contacts.
10.	the dynamic loudspeaker does not work.	1)the toggle switch ..604-1 contacts are bad.	1)press the toggle switch contacts together.
		2)the dynamic loudspeaker connection are open circuited.	2)re-establish the circuit.
11.	Whereas the TA-43 telephone set is in order, the service communication with the radio van does not function.	1)the fuse B.601-1 burned out.	1)replace the fuse with a new one.
12.	the dynamic loudspeaker amplifier is turned on, but there is no sound in the headphones.	1)the toggle switch ..604-2 contacts are damaged.	1)adjust the contacts
		2)the condenser C.603-2 broke down to the chassis.	2)replace the condenser with a tested new one.
		3)the electric connection of the transformer T.602 to the chassis is interrupted.	3)re-establish the electric connection between the transformer and the chassis.

9. In the telescopic tower.

1.	When raising the tower an increased effort is required to turn the raising crank as compared to the values listed above (in chapter 12, paragraph 12-6).	1)the outer surfaces of some or of all tower sections and dry (not lubricated.)	1)clean the outer surfaces of the tower sections by wiping them and lubricate them.

Declassified in Part - Sanitized Copy Approved for Release 2013/10/18 : CIA-RDP80T00246A071100330001-5

Declassified in Part - Sanitized Copy Approved for Release 2013/10/18 : CIA-RDP80T00246A071100330001-5
NO FOREIGN DISSEM

para. no.	defect	cause	removal.
		2).Some of the pulleys in the brackets do not turn freely.	2)lubricate the pulley shaft openings with the lubricating gun.
		3)the tower does not rise in a vertical direction.	it is necessary to properly regulate the tension of the guy cables.
2.	an increased effort is required on the crank when lowering the tower,	1)the lubricant in the brake system dried out.	1)remove the winch cover, remove the brake system from the winch and lubricating the conical surfaces of the ratchet wheel and the bronze conical insert and the gear transmission.
		2)the break system does not disconnect.	2)dis-assemble the break system, wash all parts in kerosene, wipe dry, relubricate all parts and reassemble them.
3.	short or long screeches are heard.	the lubricant on the pulley and on its shaft burned out.	dis-assemble the bracket, remove the shaft and pulley, clean the running (sliding parts of the pulley and roller off the dry lubricant and lubricate them. Re-assemble the bracket and fasten it to the tower section.
4.	the pulley shaft rotates in the bracket.	the inside surface of the pulley and outer poriphery of the shaft galled.	remove the pulley with the shaft from the bracket clean the shaft and the pulley from the lubricant. If the galling of the metal is more extensive, then it is necessary to replace the shaft and the pulley with new

Declassified in Part - Sanitized Copy Approved for Release 2013/10/18 : CIA-RDP80T00246A071100330001-5

Declassified in Part - Sanitized Copy Approved for Release 2013/10/18 : CIA-RDP80T00246A071100330001-5
NO FOREIGN DISSEM

50X1-HUM

TABLE 13-1.

Normal voltage readings of the type PCUY-3M.receiver vacuum tubes.

		When measured with the measuring element voltmeter.				
		Potential in volts.				
		/				
.201. High frequency amplifier.	6	3/220-260/	50-160	0	18.9	12.6
202. 1st.mixer.	6	3 200 - 240	35- 85	0	12,6	6,3
203. 2nd.mixer.	6	3 175-205	35-90	1.0-1.5	6.3	0
203. crystal oscillator	6	3 230-270	120-150	1.2-2.3	25.8	18.9
204. frequency multiplier.	6	3 260-280	50-130	0	6.3	0
206. 1st.I.F.stage.	6	4 225-270	40-100	0	12.6	6.3
207. 2nd.I.F.stage.	6	4 225-270	40-100	0	6.3	0
208. 3rd.I.F.stage.	6	4 225-265	70-110	1.8 2.5.	25.2	18.9
209. main detector;detector controlled wby the noise quieter-audio frequency preamplifier.	6	2 115-155	-	0	6.3	0
210. audio frequency output stages	6 6C	250-286	260-290	0	26.2	18.9
213. AVC.detector.	6x6C	-(95-115)	--	-	18.9	12.6
211. Avc.amplifier.	6 2	"	--	-(83-110	18.9	12.6
212. Noise quieter.	6 2	110-155.	---	0	12.6	6.3

Note: The table is continued on the next page.

Note: 1. the voltage on the vacuum tubes are given for a tuned receiver.
2. the table lists actual voltage values determined by means of a high resistance input vacuum tube voltmeter and voltage values determined by means of the 500 V.scale on the measuring element voltmeter.
3. the grid voltage of the type 6 2 automatic volume control amplifier vacuum tube (..211) and the cathode voltage of the type 6 x 6C automatic volume control detector vacuum tube (..213) were not measured, since the loading by the voltmeter strongly effects their performance and distrubs the normal operation of the receiver.
4. A greater range of voltage listed for the control and screen grids of some of the receiver vacuum tubes is due to the greater dependence of these voltages on the frequency and on the intensity of the crystal oscillations.

Declassified in Part - Sanitized Copy Approved for Release 2013/10/18 : CIA-RDP80T00246A071100330001-5

Declassified in Part - Sanitized Copy Approved for Release 2013/10/18 : CIA-RDP80T00246A071100330001-5

50X1-HUM

Table 13-1. (continued).

Normal voltage readings of the type PCMY-3M, receiver vacuum tubes.

Number of the vacuum tube in the schematic diagram	Type of the vacuum tube	When measuring with the vacuum tube voltmeter: On the anode.	On the screen	On the cathode	On the control grid.
201.	16...3	225 - 270	70-165	0	-(1.4-3.5)
202	16...3	205 - 260	40-120	0	-(1.4-3.5)
203.	16...3	190 - 220	40-130	1.0-1.5	-(0.1-8).
205.	16...3	235 - 275	130-160	1.2-2.5	-(10-25)
206.	16.K.4.	230 - 270	50-105	0	-(1.4-3.5)
204.	16...3	250-285	40-135	0	-(13-28)/
207.	16 K 4	235 - 237	55-110	0	-(1.4-3.5)
208.	16 K 4	230 - 270	75-115	1.5-2.5	0
209.	16 2	130 - 170	---	0	-(0.9-1.3)
210.	16 60	250 - 285	260-290	0	-(22-27)/
213.	16 x60	-(95-115)	---	--	-----
211.	16 2	-(1.4-3.5)	---	-(85-115)	----
212.	16 2	110 - 155	---	0	-(0.5-1.1)

Declassified in Part - Sanitized Copy Approved for Release 2013/10/18 : CIA-RDP80T00246A071100330001-5

Declassified in Part - Sanitized Copy Approved for Release 2013/10/18 : CIA-RDP80T00246A071100330001-5
NO FOREIGN DISSEM

50X1-HUM

C O N T E N T S.

page No,:

General description of the Radio-communication unit . . . . . 3.
The transmitter . . . . . 14.
The audio frequency section . . . . . 42.
The automatic modulation level control . . . . . 52.
The vacuum tube Volt-meter. . . . . 54.
The transmitter monitor . . . . . 62.
The high frequency/first/section of the transmitter.....69
The audio frequency/second/section of the trans-
mitter 85
The receiver and the reception apparatus . . . . . 92.
The schematic diagram of the receiver . . . . . 96.
The intermediate frequency amplification and
detection . . . . . 106.
Audio frequency amplification . . . . . 110.
The quoiting system . . . . . 114.
Design features and assmebly of the high frequency
section . . . . . 120.
Receiving equipment . . . . . 130.
The common panel of both receivers . . . . . 134.
The dynamic loudspeaker amplifier . . . . . .138.
Output circuit of the main receiver . . . . . 140.
The ayxilliary receiver control unit . . . . . 145.
The antenne feeder equipment . . . . . 147.
High frequency feeder . . . . . 148.

SECRET
NO FOREIGN DISSEM
Declassified in Part - Sanitized Copy Approved for Release 2013/10/18 : CIA-RDP80T00246A071100330001-5

Declassified in Part - Sanitized Copy Approved for Release 2013/10/18 : CIA-RDP80T00246A071100330001-5
NO FOREIGN DISSEM

50X1-HUM

Page No.:

The auxilliary receiver rod type antenna . . . . . 136.
The telescopic tower . . . . . 169.
Assembly of the tower . . . . . 170.
The radio communication unit electric power supply . . . . . 180.
The schematic diagram . . . . . 189.
The type RU-45 A converter and filter . . . . . 226.
The storage batteries. . . . . .230.
The distribution cabinet . . . . . 235.
Design features . . . . . 246.
Controlling the radio-communication unit . . . . . 248.
Controlling of the radio-communication unit from the radio van . . . . . 254.
Selection of the control unit . . . . . .257.
Connecting and disconnecting the radio communication unit . . . . . 262.
Changing the power radiated by the transmitter . . . . . 269.
The kinematic diagram of the automatic tuning system . . 273.
The kinematic diagram of the autotune head "6" , ... 291.
The selection and switching of the transmitter . . . . . 295.
The remote control unit . . . . . 298.
The microphone amplifier . . . . . 298 318.
The service communication between the remote control unit VPU and the radio van . . . . . 320.
Design features . . . . . 327.
Lay out of the radio communication equipment . . . . . 330.
The trailer layout . . . . . .

SECRET
NO FOREIGN DISSEM
Declassified in Part - Sanitized Copy Approved for Release 2013/10/18 : CIA-RDP80T00246A071100330001-5

Declassified in Part - Sanitized Copy Approved for Release 2013/10/18 : CIA-RDP80T00246A071100330001-5
NO FOREIGN DISSEM

Page No.:

Illumination and heating and ventilation of the radio van . . . . . 334.

Ventilation . . . . . 338a.

Instruction for the use of the radio communication unit RAS-KV . . . . . 339.

Setting up the radio communication unit. . . . . 351.

Transmitter modulation level adjustment . . . . . 360.

Mechanical semi-duplex communication . . . . . 373.

Packing radio communication unit . . . . . 393.

Regular maintenance of the radio Van apparatus and of the r.c.u. equipment. . . . 397.

Care of the telescopi tower . . . . . .410.

Lubrication table . . . . . 412.

Compulsory maintenance . . . . . 425.

Main methode of determining defects of the radio communication unit and their removal . . . . . 435.

Possible defects in the operatinn of the radio communication unit elements and methods for their removal. Tables . . . . . 462.

SECRET

NO FOREIGN DISSEM

Declassified in Part - Sanitized Copy Approved for Release 2013/10/18 : CIA-RDP80T00246A071100330001-5

Declassified in Part - Sanitized Copy Approved for Release 2013/10/18 : CIA-RDP80T00246A071100330001-5
NO FOREIGN DISSEM

50X1-HUM

LIST OF FIGURES.

Fig.No.: Page No.:

1-1/ General view of the type PAC-YKB mobile radio communication unit . . . . . 4.

1-2/ Block diagram of the mobile radio communication unit . . . . . 12.

2-1/ Block diagram of the type YKB-250 transmitter.... 18.

2-2/ Schematic diagram of the crystal oscillator doubler . . . . . 20.

2-3/ Schematic diagram of the crystal oscillator for the first harmonic frequency of the crystal...21.

2-4/ Equivalent schematic diagram of the crystal oscillator for the first harmonic frequency of the crystal . . . . . 21.

2-5/ Schematic diagram of the first tripler . . . . . 22.

2-6/ Schematic diagram of the second tripler . . . . 24.

2-7/ Schematic diagram of the first power amplifier....26.

2-8/ Schematic diagram of the second power amplifier.. 27.

2-9/ Schematic diagram/for the various alternatives of electric amplifier . . . . . .29.

2-10/Equivalent schematic diagram of an amplifier with a grounded grid . . . . . 29.

2-11/Schematic diagram of the output power amplifier . . . . . 31.

2-12/Schematic diagram of the symmetrization equipment, the reception-transmission relay and the antenna feeder system . . . . . .35.

2-13 Curent distribution on the outside surface of the feeder . . . . . 36.

SECRET
NO FOREIGN DISSEM
Declassified in Part - Sanitized Copy Approved for Release 2013/10/18 : CIA-RDP80T00246A071100330001-5

Declassified in Part - Sanitized Copy Approved for Release 2013/10/18 : CIA-RDP80T00246A071100330001-5
NO FOREIGN DISSEM

50X1-HUM

Fig.No.: Page No.:

2-14/ Schematic diagram of the symetrization unit ..... 37.
2-16/ Voltage distribution-current distribution and short-circuited line input impedance distribution...38.
2-16/ Equivalent schematic diagram of the symetrization unit .....39.
2-17/ Schematic diagram of the transmitter audio section input circuit .....43.
2-18/ Schematic diagram of the audio frequency preamplifier, modulation or and automatic transmitter modulation level control ..... 47.
2-19/ Schematic diagram of the vacuum tube voltmeter..... 56.
2-20/ The principle of the radiotelephony amplitude modulation ..... 59.
2-21/ Schematic diagram of the modulation monitor..... 60.
2-22/ Schematic diagram of the transmitter operation indicator ..... 63.
2-23/ Schematic diagram of the transmitter operating readeness signalling and sound monitoring ..... 65.
2-24/ General view of the type YKB-250 transmitter/ /with front door removed/. ..... 66.
2-25/ Transmitter rack.with side and rear doors removed....67.
2-26/ View of the lower transmitter rack section..... 68.
2-27/ Transmitter high frequency section/front and right view/.. ..... .70.
2-28/ Transmitter high frequency section/rear and left view.... 71.

SECRET
NO FOREIGN DISSEM
Declassified in Part - Sanitized Copy Approved for Release 2013/10/18 : CIA-RDP80T00246A071100330001-5

Declassified in Part - Sanitized Copy Approved for Release 2013/10/18 : CIA-RDP80T00246A071100330001-5
NO FOREIGN DISSEM

Fig.No.: Page No.:

2-29/ Block of the first stages/a-right hand side view, b-left hand side view/..... 73.
2-30/ The fifth stage block/rear and side view..... 74.
2-31/ The sixth stage block. . . . . 75.
2-32/ Foundation of the fifth stage block/general view....76.
2-33/ Foundation of the fifth stage block/bottom view . . . . . 77.
2-34/ Symetrization unit . . . . . 80.
2-35/ The reception transmission relay block ..... 81.
2-36/ The transmitter operation indicator block..... 84.
2-37/ Transmitter audio frequency section/top view..... 88.
2-38/ Transmitter audio frequency section.rear view with the shield removed/. . . . . 89.
3-1/ The block diagram of the type RCIU-DI ..... 95.
3-2/ The schematic diagram of the high frequency amplifier..... 97.
3-3/ The schematic diagram of the first mixer..... 98.
3-4/ The schematic diagram of the second mixer..... 100.
3-5/ Schematic diagram of the crystal oscillator..... 102.
3-6/ The schematic diagram of the frequency multiplier --103.
3-7/ Schematic diagram of the intermediate frequency amplifier, the main detector and the quieter control detector . . . . . .108.
3-8/ The schematic diagram of the audio frequency amplifier . . . . . 111.

Declassified in Part - Sanitized Copy Approved for Release 2013/10/18 : CIA-RDP80T00246A071100330001-5

Declassified in Part - Sanitized Copy Approved for Release 2013/10/18 : CIA-RDP80T00246A071100330001-5
NO FOREIGN DISSEM

50X1-HUM

Fig.No.: Page No.:

3-9/ The schematic diagram of the delayed auto - matic volume control . . . . . 113.

3-10/ The schematic diagram of the quieter and of the detector controlling it . . . . . 115.

3-11/ The type PCTU-3M receiver.general view with the cover removed . . . . . .117.

3-12/ The type PCIY-3M receiver/general view with the cover removed/. . . . . .119.

3-13/ The type PCIU-3M receiver/with the housing removed . . . . . 119.

3-14/ The schematic diagram of the measuring instrument....125.

3-15/ Measuring instrument/general view with the cover over open/ . . . . . 129.

3-16/ Block diagram of the radio communication unit receiver equipment . . . . . .131.

3-17/ The auxilliary/upper/and main recdiver with their panel mounted in the frame . . . . . 132.

3-18/ The common panel of both receivers/general view..... 137.

3-19/ The common panel of both receivers/rear top view with the cover removed . . . . . 137.

3-20/ Schematic diagtam of the dynamic loudspeaker ampl. ..... 138.

3-21/ The dynamic loudspeaker amplifier/general view.....139.

3-22/ Schematic diagram of the main receiver output circuits . . . . . 140.

3-23/ Schematic diagram of the auxilliary receiver panel controlling the mobile radio c.u. . . . . 144.

SECRET

NO FOREIGN DISSEM
Declassified in Part - Sanitized Copy Approved for Release 2013/10/18 : CIA-RDP80T00246A071100330001-5

Declassified in Part - Sanitized Copy Approved for Release 2013/10/18 : CIA-RDP80T00246A071100330001-5

 50X1-HUM

Fig.No.: Page No.:

5-24/ Auxilliary receiver control panel/
/general view/. . . . . 146.

4-1/ The efficiency coefficient as a function
of the travelling wave coefficient and the
length of the PK-6 cable . . . . . 151.

4-2/ Quator wavelength .....losing cylinder ..... 152.

4-3/ Schematic diagram of the cone and disk
type radiator . . . . . 154.

4-4/ The cone and disk type antenna/genaral
view/. . . . . .155.

4-5/ Schematic diagram of the auxilliary receiver
antenna . . . . . .157.

4-6/ Schematic diagram of the wave channel/Yagi/
type directional antenna . . . . . 160.

4-7/ Typical horizontal plane radiation pattern
of the "cone channel"/Yagi/type direction ant...161.

4-8/ Spacings between radiators and their lengths
for various wavelengths. . . . . .162.

4-9/ Radiation pattern of the "wave channel" type
antenna/general view/. . . . . .163.

4-11/ Transition section with the symetrization unit
and the active radiator of the "wave channel"/Yagi
/Yagi/type directional antena . . . . . 166.

Declassified in Part - Sanitized Copy Approved for Release 2013/10/18 : CIA-RDP80T00246A071100330001-5

Declassified in Part - Sanitized Copy Approved for Release 2013/10/18 : CIA-RDP80T00246A071100330001-5
NO FOREIGN DISSEM

50X1-HUM

Fig.No.: Page No.:

4-12/ The "wave channel/Yagi/type directi-onal antenna mounted on the tower..... 167.
4-13/ Telescopic tower/gene ral view/..... 169.
4-14/ The first tower section ... . 171.
4-15/ The secondmovable/tower section . . . . . 171.
4-16/ The second/movable/tower section assembly..... 171.
4-17/ Movable tower section/complete/..... 171.
4-18/ Assembly of the movable sections . . . . . 171.
4-19/ Eccentric base . . . . . 172.
4-20/ Cable . . . . . 172.
4-21/ Eccentric ring . . . . . 172.
4-22/ Coupling of the movable tower sections . . . . . 172.
4-23/ Diagram of the winch/raising.mechanism..... 172.
4-24/ The winch friction brake . . . . . 174.
4-25/ Kinematic diagram of telescopic tower sections..... 176.
4-26/ Diagram of the connection of the second section cable with the first section and the drum of the winch . . . . . .177.
4-27/ Part of the winch.raising.mechanism . . . . . 179.
5-1/ Block diagram of the mobile radio communication unit power supplies. . . . . 182.
5-2/ Schematic diagram of the BCP-6 rectifier block 5. .... 193.
5-3/ Schematic diagram of the radio communication unit/transmitter.connections-schematic..... diagram of the type BCP±_ selenium rectifier..... 196.
5-5/ The schematic diagram of the - 300 V and the +300 V rectifiers . . . . . 204.
5-4/ The schematic diagram of the 26 V rectifier..... 203

NO FOREIGN DISSEM
Declassified in Part - Sanitized Copy Approved for Release 2013/10/18 : CIA-RDP80T00246A071100330001-5

Declassified in Part - Sanitized Copy Approved for Release 2013/10/18 : CIA-RDP80T00246A071100330001-5
NO FOREIGN DISSEM

50X1-HUM

Fig.No.: Page No.:

5-6/ The schematic diagram of the 600 V rectifier . . . . . 206.
5-7/ The schematic diagram of the L.350 V. rectifier . . . . . 209.
5-8/ General view of the type BCP-6 selenium rectifier . . . . . 211.
5-9/ The BCP-6 rectifier rack/side and rear wcovers removed . . . . . 213.
5-10/ Schematic diagram of the supply elements located in the transmitter rack . . . . . .220.
5-11/ Schematic diagram of the BBB BPU-2 selenium rectifier for supplying the receivers and the remote units . . . . . 223.
5-12/ The type BPC-2 selenium rectifier for supplying the receivers and the remote control units.general view- 225
5-13/ The type BPU-2 selenium rectifier.rear top view with the cover removed/..... . . . . 225.
5-14/ Schematic diagram of the type PY-45A converter with its filter . . . . . 227.
5-15/ The schematic diagram of the distribution cabinet . . . . . 231.
5-16/ Distribution cabinet.general view/..... 233.
5-17/ Schematic diagram of the BCP-1 selenium rectifier for battery charging . . . . . .236.
5-18/ The type BC..-1 charger rectifier/general view . . . . . 237.

NO FOREIGN DISSEM
Declassified in Part - Sanitized Copy Approved for Release 2013/10/18 : CIA-RDP80T00246A071100330001-5

Declassified in Part - Sanitized Copy Approved for Release 2013/10/18 : CIA-RDP80T00246A071100330001-5
NO FOREIGN DISSEM

Fig.No. Page No.:

5-19/ Schematic diagram of the type ....-10-12 vibrator converter . . . . . 238.

5-20/ The type B - 10-12 vibrator converter/ /general view/ .. . . . .242.

5-21/ The type B - 10 -.12 vibrator .converter. . . . . /view of the chassis and the vertical panel from the vibrator side with the housing/cover/ removal . . . . . .244.

5-22/ The type B 10-12 vibrator converter/view of the vertical panel with the housing/ cover/removal..... 244.

5-1/ /Central control unit/B..Y)-first view with the cover of the out-put removed/ 252

6-2/ The schematic diagram of the circuits for starting and stopping the power for engine from the central control unit.. . . . .258.

6-3/ The schematic diagram of the circuit for switching the transmitter output power . . . . . 263.

6-4/ Locking device of the .autotune,..... 266.

6-5/ Function of the autotune head locking screw..... 268.

6-6/ Kinematic diagram of the autotune heads and their drive . . . . . .270 272.

6-7/ Autotune head . . . . . 272.

6-8/ Kinematic diagram of the autotune head "5"..... 272.

6-9/ Kinematic diagram of the autotune coupling to the variable continuous of the transmitter high frequency stages . . . . . 275.

Declassified in Part - Sanitized Copy Approved for Release 2013/10/18 : CIA-RDP80T00246A071100330001-5

Declassified in Part - Sanitized Copy Approved for Release 2013/10/18 : CIA-RDP80T00246A071100330001-5

[redacted]

Declassified in Part - Sanitized Copy Approved for Release 2013/10/18 : CIA-RDP80T00246A071100330001-5